MONITORING REPORT FORM (CDM-MR)
Version 01 - in effect as of: 28/09/2010

CONTENTS

A. General description of the project activity
- A.1. Brief description of the project activity
- A.2. Project participants
- A.3. Location of the project activity
- A.4. Technical description of the project
- A.5. Title, reference and version of the baseline and monitoring methodology applied to the project activity
- A.6. Registration date of the project activity
- A.7. Crediting period of the project activity and related information
- A.8. Name and responsible person(s)/entity(ies)

B. Implementation of the project activity
- B.1. Implementation status of the project activity
- B.2. Revision of the monitoring plan
- B.3. Request for deviation applied to this monitoring period
- B.4. Notification or request of approval of changes

C. Description of the monitoring system

D. Data and parameters monitored
- D.1. Data and parameters used to calculate baseline emissions
- D.2. Data and parameters used to calculate project emissions
- D.3. Data and parameters used to calculate leakage emissions
- D.4. Other relevant data and parameters

E. Emission reductions calculation
- E.1. Baseline emissions calculation
- E.2. Project emissions calculation
- E.3. Leakage calculation
- E.4. Emission reductions calculation/table
- E.5. Comparison of actual emission reductions with estimates in the registered CDM-PDD
- E.6. Remarks on difference from estimated value

Annex 1 – Table of Equipments/General Information

MONITORING REPORT
VERSION 1.1 – 05/04/2012

"N2O EMISSION REDUCTION IN PAULÍNIA, SP, BRAZIL"
UNFCCC 0116
MONITORING REPORT # 52 (from 15/02/2012 to 31/03/2012)

SECTION A. General description of the project activity

A.1. Brief description of the project activity

Nitrous oxide (N_2O) is a by-product of adipic acid production. It is of low toxicity but is a greenhouse gas (GHG), whose GWP is large (GWP=310 in the IPCC 2nd Assessment Report). Emissions of N_2O are considered under the Kyoto Protocol and there are no national or regional regulations or restrictions on the emission of N_2O in Brazil.

In this project, the thermal decomposition process equipment has been added to the adipic acid manufacturing plant. This installation reduces the GHG emissions, which would otherwise be released to the atmosphere if the project was not implemented.
The thermal decomposition facility was installed and commissioned in the manufacturing factory site of Paulínia Rhodia Poliamida e Especialidades Ltda. during October and November 2006 and the destruction of N_2O was started in 19/11/2006. The N_2O destruction unit is in continuous operation since its start-up and has only stopped for short periods due to planned and corrective maintenance operations.

In the monitoring period #52 the emission reductions achieved are: 830,704 tCO_2e

A.2. Project Participants

Rhodia Energy Brazil Ltda
Rhodia Energy SAS
Rhodia Energy GHG SAS
Société Générale
ORBEO
NATIXIS
NATIXIS Environnement & Infrastructures
Noble Carbon Credits Limited
Rhodia Japan Ltd

A.3. Location of the project activity:

The N_2O decomposition unit is located in the Rhodia site at the municipality of Paulínia, state of São Paulo, Brazil.
GPS coordinates: -22.753611 -47.158889

A.4. Technical description of the project

A thermal oxidizer with 2 chambers is the technology used to decompose N_2O at the Rhodia Paulínia site.

Natural gas is fed with the off gas from the adipic acid production containing N_2O and a controlled amount of air in a reduction chamber, where it burns (oxidizes) to carbon dioxide (CO_2) and water vapour. N_2O is used as an oxidizer. Being oxygen deficient, the oxidation is not complete and carbon monoxide and hydrogen are present.

$$CH_4 + 4\ N_2O \rightarrow CO_2 + 2\ H_2O + 4\ N_2$$

The temperature in the furnace is kept at about 1300°C and under fuel rich conditions, so as to promote the complete decomposition of N_2O while minimizing the formation of unwanted combustion by-products such as NO and NO_2.

The gas is then quenched with air to complete the combustion of carbon monoxide and hydrogen at a temperature of about 950°C in a second chamber. Aqueous ammonia is injected to control the emission of NO and NO_2.

Before release to the stack, the flue gas coming from the thermal oxidizer is used to produce superheated steam, which is fed into the existing on-site steam network.

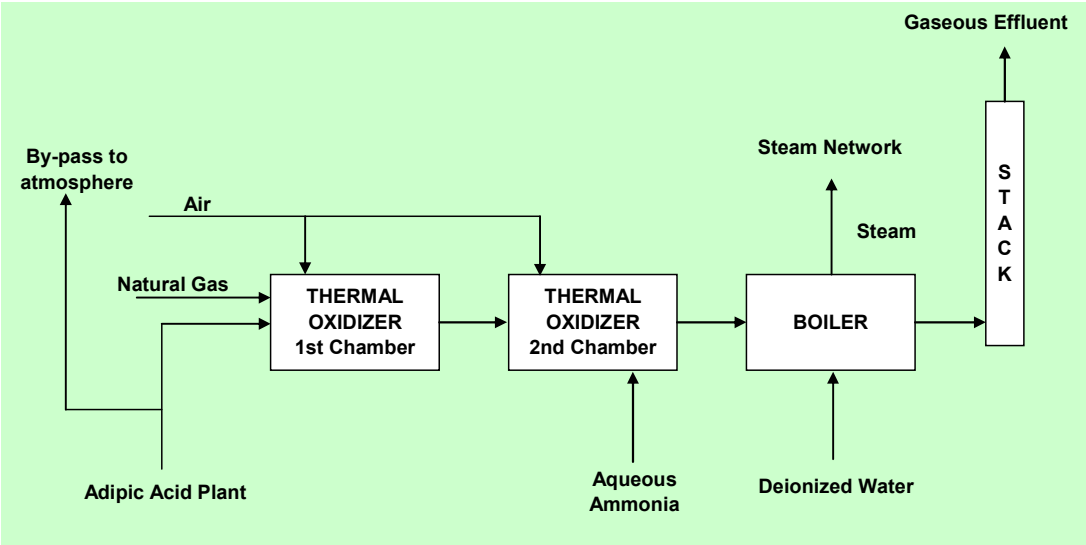

A.5. Title, reference and version of the baseline and monitoring methodology applied to the project activity:

Approved baseline and monitoring methodology:
AM0021/version 1 - "Baseline Methodology for decomposition of N2O from existing adipic acid production plants"

Referenced Tools:
- EB 61 Annex 11 "Tool to determine the mass flow for GHG gaseous streams" version 2, 03/06/2011
- ACM0002/version 2 – "Consolidated methodology for Grid-Connected electricity generation from renewable resources" – Calculation of the CO_2 emission factor of the power generation

Project Design Document (PDD):
N2O Emission Reduction in Paulinia, SP, Brazil.Version number of the document: 4
Date: 12/10/2005

Related EB guidance:
EB45 Annex13 "Guidance to calculate adipic acid production in cases where it cannot be measured directly" version 1, 13/02/2009

A.6. Registration date of the project activity:

The project was registered by the UNFCCC on 25/12/2005.

A.7. Crediting period of the project activity and related information (start date and choice of crediting period):

The first crediting period (on-going) is from 19/11/2006 to 18/11/2013 (renewable).

A.8. Name of responsible person(s)/entity(ies):

Philippe Kehren, Rhodia Energy GHG
Tour La Pacific. 11, cours Valmy La Defense 7
92977 Paris La Defense, France
TEL : +33 1 53 56 61 02
FAX : +33 1 53 56 61 10

SECTION B. Implementation of the project activity

B.1. Implementation status of the project activity

The project is fully implemented according to the description presented in the PDD. The project activity is completely operational since the start date of operation on 19/11/2006.

During this monitoring period # 52 no particular event occurred that could impact the applicability of the methodology.

During this period, there were two unusual events:

- N_2O Unit Shutdown on 20/03/2012 at 08:19 due to a safety trip caused by a low pressure in the instrument air. The reconnection was performed on the same day at 17:28. During this event the AA plant continued running, hence the % online, which is the % of production time that N2O is feeding the destruction facility, was lower than 100% on the 20/03/2012 and 21/03/2012.

Data acquisition failure in the PIMS server on 19/02/2012 (from 00:00 to 16:03). Despite the failure of the PIMS, there was no problem with the instruments and the operations were not disturbed at all. However, during the event, there was no data acquisition and conservative default values for several instruments were used .

B.2. Revision of the monitoring plan

No revision to the monitoring plan has been sought since the beginning of project activity.

B.3. Request for deviation applied to this monitoring period

No request for deviation of the monitoring plan was applied to this monitoring period.

B.4. Notification or request of approval of changes

No changes to the project activity as described in the registered CDM-PDD have been requested.

SECTION C. Description of the Monitoring system

The project boundary related to the baseline methodology is shown below and this project boundary is used and explained in the PDD.
Potential sources of anthropogenic emissions by sources of GHG within the project boundary and emissions which are not included in the project boundary are also shown in below and the details of the parameters are informed in the section D.

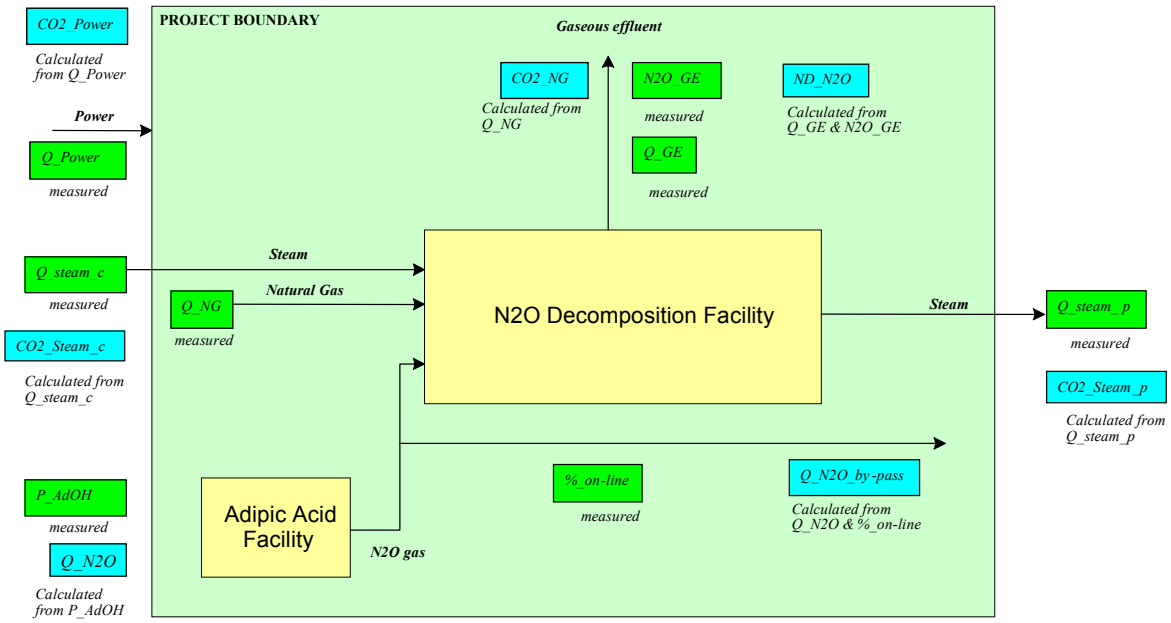

Figure 1. Project Boundary

All data collection procedures, the organizational structure, the rules and responsibilities and procedures for dealing with abnormal situations are described in detail in the Data Handling Protocol and Data Review Protocol which are documents of Rhodia Quality System. Rhodia is ISO9001 and ISO14001 certified.
The responsibilities of all persons dealing with information and data used to prepare the monitoring report are clearly indicated in the internal quality management system.
The Adipic Acid Plant Manager is responsible for implementing and maintaining the monitoring procedures on site (Data Handling Protocol, training, calibration and maintenance, data review) and for validating all data. The overall responsibility of the project is with the CO_2 Operations Director of Rhodia Energy GHG located in Paris, France.
All measuring instruments used in this project are calibrated and maintained according to the specifications provided by the manufacturers and/or relevant national and international standards.
All the data used for monitoring the baseline, project and leakage emissions are collected in the PIMS (Plant Information Management System). Two types of data are stored in the PIMS:
(a) Process data (flow rates, pressures, temperatures etc.) are continuously acquired by the DCS (Distributed Control System) and automatically stored by the PIMS;

(b) Packaged dry adipic acid production, slurry production and laboratory analysis used for daily production calculation are obtained from dedicated excel files and are manually entered into the PIMS database every working day by the authorized staff.
The calculation of the daily production of adipic acid and of the nitric acid consumption is carried out using the data stored in PIMS. The results obtained are transferred to the SAP (System, Applications and products for Data Processing) system which is the official system used by Rhodia for production management and accounting purposes.
The emission reductions calculations are performed in a dedicated excel Workbook. Data are periodically extracted from PIMS using an excel tool and transferred to the Workbook. Some external data are input directly into the Workbook (e.g.: natural gas composition).
The calculations made in the Workbook are used for the preparation of the monitoring report.
The following diagram illustrates the entire process of data acquisition, storage and transfer to the Workbook and preparation of the monitoring report:

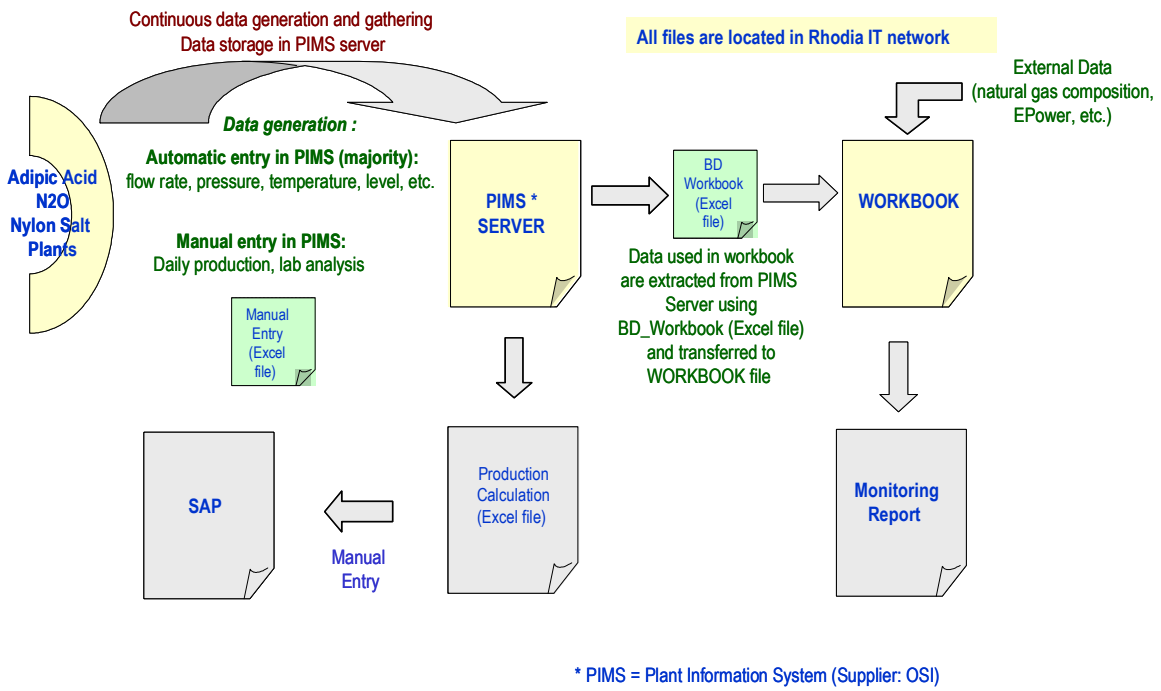

Figure 2. Data Flow Diagram

SECTION D. Data and parameters

D.1 Data and parameters determined at registration and not monitored during the monitoring period, including default values and factors	
Data / Parameter:	**GWP_N_2O**
Data unit:	tCO_2e per tN_2O
Description:	Global Warming Potential of N_2O
Source of data used	Kyoto Protocol (Decision 2/CP.3) and IPCC
Value(s) :	310
Data used for:	Baseline and Project Emissions
Additional comment:	

Data / Parameter:	**KE_N2O**
Data unit:	tN_2O per tonne of adipic acid produced
Description:	Lowest emission factor
Source of data used	IPCC Good Practice Guidance
Value(s) :	0.27
Data used for:	Baseline Emissions
Additional comment:	Cap value for N_2O_/AdOH emission factor

Data / Parameter:	**ΔH**
Data unit:	kJ/t of steam
Description:	Enthalpy of super heated steam at a pressure level of 40 Bar
Source of data used	Monitoring Plan Section B.3
Value(s) :	2,624,000
Data used for:	Baseline Emissions
Additional comment:	Not Applicable

Data / Parameter:	**η**
Data unit:	%
Description:	Operational efficiency of the natural gas steam boiler
Source of data used	Monitoring Plan Section B.3
Value(s) :	97
Data used for:	Baseline Emissions
Additional comment:	Not Applicable

D.2 Data and parameters monitored					
Data / Parameter:	**P_AdOH**				
Data unit:	tonnes				
Description:	Amount of adipic acid production				
Measured /Calculated /Default:	Measured				
	Several instruments are used				
Source of data:	DCS data and Production log sheets				
Value(s) of monitored parameter:		From	To	P_AdOH Produced	P_AdOH Eligible*
	Period Value:	15/02/2012	31/03/2012	10,001.173	10,001.173
	Monthly Values:	15/02/2012	29/02/2012	3,544.496	3,544.496
		01/03/2012	31/03/2012	6,456.678	6,456.678
	P_AdOH Current year		28,939		
	P_AdOH Annual Cap:		87,308		
	* Adipic acid production for baseline emission calculation, after cap application				
Data used for:	Baseline and Project Emissions				
Monitoring equipment (type, accuracy class, calibration frequency, date of last calibration, validity):	**Equipment**	**Type**	**Accuracy class**	**Calibration frequency**	**Calibration Information**
	Packaging machine (Z-3110) Serial Number 6046	Load cell 50 kg	+/- 0.02 kg	1/month	Last calibration 15/03/2012 Valid until 14/04/2012
	Packaging machine (G-2532) Serial Number 10869A	Load cell 100 kg	+/- 0.02 kg	1/month	Last calibration 15/03/2012 Valid until 14/04/2012
	Weigh scale (Z-3120) Serial Number 104BA4	Load cell 1,000 kg	+/- 0.5 kg	4/year	Last calibration 15/03/2012 Valid until 14/06/2012
	Truck weigh scale (BB-0090) Serial Number 7597	Load cell 80,000 kg	+/- 15 kg	2/year	Last calibration 21/10/2011 Valid until 20/04/2012

	Truck weigh scale (BB-0335) Serial Number 28812	Load cell 80,000 kg	+/- 15 kg	2/year	Last calibration 06/11/2011 Valid until 05/05/2012
	Level tank R-5300 (LT-4500) Serial Number U505269	Pressure bubbling level – differential. Pressure	+/- 0.075 %	1/year	Last calibration 14/07/2011 Valid until 13/07/2012
	Level tank R-5310 (LT-4509) Serial Number U308909	Pressure bubbling level – differential Pressure	+/- 0.075 %	1/year	Last calibration 23/02/2012 Valid until 22/02/2013
	Lab equipment RFM-340 Serial Number BT99344	Refractometer	+/- 0.02 %	1/week (Rhodia verification)	Last calibration 29/03/2012 Valid until following week
				2/year (Third party calibration)	Last calibration 23/02/2012 Valid until 22/08/2012
	Level tank RE-2422 (LI-2422) Serial Number 6/341921001	Radar level device	+/- 0.3 %	1/year	Last calibration 31/08/2011 Valid until 30/08/2012
Measuring/ Reading/ Recording frequency:	Measured and recorded daily/Aggregated monthly and yearly				

Calculation method (if applicable):	The daily adipic acid production is the sum of the dry adipic acid + slurry adipic acid used in the Nylon salt production + the in-process inventory variation. This calculation is automatically performed in the PIMS every day at 5:00 p.m. From the PIMS data bank the daily production is automatically extracted using an Excel file and is manually input into the SAP. The dry adipic acid is the product packed determined by weigh scales. The slurry adipic acid cannot be measured directly. In accordance with the EB guidance issued in the 45th EB meeting the production of slurry adipic acid is obtained by multiplying the Nylon Salt produced by the ratio 0.55748 between adipic acid and Nylon Salt, consistent with the steady composition of the Nylon Salt (reflected by a constant and precise value of the pH). The Nylon Salt produced is measured by weigh scales of trucks and inventory variation of the Nylon Salt. The cumulated production of Adipic acid over the current year (starting last November 19th and ending with the last day of this period) is below the cap value of 87,308 tonnes as stated by the EB 47th meeting decision. The value of 87,308 tonnes was calculated in the Validation Report as the maximum daily production in 2004 x 365 x the operational rate (260 t/day x 365 x 92%) which is consistent with the clarification of EB 48th meeting report §24 of 17/07/2009. The Executive Board has confirmed on EB36 the application of a yearly Adipic acid production cap as required by the methodology. This approach is consistent with the definitions and requirements of the "Guidance on accounting eligible HFC-23" AM0001 (EB39 Annex 8): the year of the crediting period is defined on the basis of the starting date of the crediting period of a project activity (November 19th); the current period ends on November 18th, which is the end date of the year of the crediting period. The overall accuracy on P_AdOH is calculated, sheet UC_AdOH, and was found to be around 0.25% which is consistent with the PDD requirement of +/- 1%.
QA/QC procedures applied:	Data Handling Protocol - ISAL-ADOH-QA-007

Data / Parameter:	**Nitric acid consumption (HNO3_consumption)**
Data unit:	tonnes
Description:	Nitric acid consumption for the calculation of HNO_3 chemical
Measured /Calculated /Default:	Measured Several instruments are used
Source of data	DCS data and Production log sheets

Value(s) of monitored parameter:			HNO3_consumption		
	Rolling year	31/03/2012	74,036		
	From	To			
	15/02/2012	29/02/2012	3,176		
	01/03/2012	31/03/2012	5,757		
Data used for:	Baseline and Project Emissions				
Monitoring equipment (type, accuracy class, calibration frequency, date of last calibration, validity):	**Equipment**	**Type**	**Accuracy class**	**Calibration frequency**	**Calibration Information**
	Nitric acid mass flow meter (FQ-2179) Serial number 12000364 3748161	Mass flow meter	+/- 0.1 %	2 years	Last calibration
					21/07/2010
					Valid until
					20/07/2012
	Fresh nitric acid concentration analyzer (AI-2179) Serial number 12000364 3748161	Device integrated to mass flow meter FQ-2179	+/- 0.5 %	2 years	Last calibration
					03/08/2010
					Valid until
					02/08/2012
	Level of nitric acid storage tank F-1769 (LI-3350) Serial number 91F345787-611	Air bubble gauge (back-up from FQ-2179)	+/- 0.065 %	1/year	Last calibration
					08/03/2012
					Valid until
					07/03/2013
	Flow meter of fresh nitric acid to storage (FQ-3318) Serial number 07FM-C203 (Flow meter) 07TM-C203 (Transmitter) (removed on 04/03/2012 during planned shutdown (end of campaign) at Nitric Acid Plant)	Magnetic Flow Meter (back-up from FQ-2179)	+/- 1 %	1/year	Last calibration
					07/07/2011
					Valid until
					06/07/2012

	Flow meter of fresh nitric acid to storage (FQ-3318) Serial number 880162188 (Flow meter) 0304645 (Transmitter) (installed in the Nitric Plant on 08/03/2012 during planned shutdown (end of campaign)).	Magnetic Flow Meter (back-up from FQ-2179)	+/- 1 %	1/year	Last calibration
					29/02/2012
					Valid until
					27/02/2013
Measuring/ Reading/ Recording frequency:	Measured continuously and recorded daily/Aggregated monthly and yearly				
Calculation method (if applicable):	The nitric acid consumption is based upon the quantity of nitric acid fed to the adipic acid plant during given period and the holding volume and concentration of the process storage tanks (mother acid tank, Oxidation acid tank, Concentration acid tank), which is obtained directly from the DCS and stored at PIMS data base.				
QA/QC procedures applied:	Data Handling Protocol - ISAL-ADOH-QA-007				

Data / Parameter:	**Physical losses in the adipic acid production process (HNO_3_physical)**			
Data unit:	tonnes			
Description:	Physical losses in the adipic acid production process data required for calculation of HNO_3 chemical and the N_2O emission factor N_2O_AdOH			
Measured /Calculated /Default:	Measured Several instruments are used			
Source of data	DCS data and lab data			
Value(s) of monitored parameter:			HNO_3_physical	
	Rolling year	31/03/2012	1,046	
	From	To		
	15/02/2012	29/02/2012	113	
	01/03/2012	31/03/2012	77	
Data used for:	Baseline and Project Emissions			

	Equipment	Type	Accuracy class	Calibration frequency	Calibration Information
Monitoring equipment (type, accuracy class, calibration frequency, date of last calibration, validity):	Flow meter of effluent to biological WWT (FQ-2973) Serial number 91F321071-608	Orifice plate flow - Differential pressure	+/- 0.60 %	1/year	Last calibration 21/07/2011 Valid until 20/07/2012
	Flow meter of effluent to neutralization (FQ-2974) Serial Number 91F321074-608	Orifice plate flow - Differential pressure	+/- 0.85 %	1/year	Last calibration 21/07/2011 Valid until 20/07/2012
	Waste gas flow meter (FQ-3450) Serial Number 91G511075-720	Orifice plate flow - Multivariable transmitter	+/- 1.6 %	1/year	Last calibration 30/11/2011 Valid until 29/11/2012
	Waste gas flow meter (FIC-3401) Serial Number JEJAAR772-625	Pitot tube flow meter - Differential pressure (back-up from FQ-3450)	+/- 1.45 %	1/year	Last calibration 05/10/2011 Valid until 04/10/2012
	Nitric analyzer on effluent to neutralization (AI-2974) Serial Number 45201	pHmeter	+/- 0.05 %	2/month	Last calibration 22/03/2012 Valid until Following 15 days
	Nitric analyzer on effluent to neutralization (AI-2974B) Serial number 39237	pHmeter (back-up from AI-2974)	+/- 0.07 %	2/month	Last calibration 29/03/2012 Valid until Following 15 days

	NOx Analyzer (AI-2195AB) Serial Number 400561459533	Gas Analyzer - infrared and ultraviolet NOx measurement Sum of AI-2195A (NO) and AI-2195B (NO_2)	+/- <1 %	1/week	Last calibration
					29/03/2012
					Valid until
					Following week
Measuring/ Reading/ Recording frequency:	Measured continuously and recorded daily/Aggregated monthly and yearly.				
Calculation method (if applicable):	Physical losses (HNO_3_physical) are calculated as the sum of the losses of nitric acid or its derivatives in the aqueous wastes, the off gases, the adipic acid product (impurity) and the by-products				
QA/QC procedures applied:	Data Handling Protocol - ISAL-ADOH-QA-007				

Data / Parameter:	**HNO_3_Chemical**				
Data unit:	tonnes				
Description:	Chemical consumption of Nitric acid required for the calculation of the N_2O emission factor N_2O_AdOH				
Measured /Calculated /Default:	Calculated				
Source of data	Excel Workbook based on HNO3_consumption and HNO_3_physical				
Value(s) of monitored parameter:			HNO3_ consumption	HNO_3_ physical	HNO_3_ chemical
	Rolling year	31/03/2012	74,036	1,046	72,990
	From	To			
	15/02/2012	29/02/2012	3,176	113	3,063
	01/03/2012	31/03/2012	5,757	77	5,680
Data used for:	Baseline and Project Emissions				
Monitoring equipment	Not applicable				
Measuring/ Reading/ Recording frequency:	Calculated and recorded monthly and yearly				
Calculation method (if applicable):	To obtain the chemical consumption (HNO_3_chemical), the physical losses are deducted from the nitric acid consumption. HNO_3_chemical = HNO3_consumption - HNO_3_physical				

QA/QC procedures applied:	Data Handling Protocol - ISAL-ADOH-QA-007

Data / Parameter:	**N_2O_/AdOH**				
Data unit:	t N_2O/t adipic acid				
Description:	Actual N_2O emission factor for adipic acid production				
Measured /Calculated /Default:	Calculated				
Source of data:	Excel Worbook based on HNO_3 chemical and P_AdOH				
Value(s) of monitored parameter:	Period or Month	N_2O_/AdOH (Calculated for month/period)	N_2O_/AdOH (Calculated for rolling year)	N_2O_/AdOH (Applied for baseline emissions)	N_2O_/AdOH (Applied for project emissions)
	15/02/2012 31/03/2012	0.293	0.292	0.270	0.293
	15/02/2012 29/02/2012	0.290	0.291	0.270	0.291
	01/03/2012 31/03/2012	0.295	0.292	0.270	0.295
	The calculation of the by-pass emissions uses the monthly values of the emission factor N_2O_/AdOH applied for project emissions. The by-pass emissions for the period are calculated as the sum of the monthly values, and do not use the N2O_/AdOH value of the period, given here for information only.				
Data used for:	Baseline and Project Emissions				
Monitoring equipment	Not applicable				
Measuring/ Reading/ Recording frequency:	Measuring not applicable/Recorded monthly and yearly				
Calculation method (if applicable):	The N_2O emission factor is calculated in two ways: (1) with the month/period values of HNO3_chemical and P_AdOH (2) using the rolling year cumulated data of HNO3_chemical and P_AdOH The formula used according to AM0021/version 1 equation (4) is: N_2O_AdOH = HNO_3_chemical / P_AdOH / 63 /2 x 0.96 x 44 For Baseline Emissions, the lowest among the 2 above calculated values and 0.27 is used conservatively, as specified in the PDD table D.2.1.3 and required by the methodology AM0021/version 1 (page 4). To be conservative, the highest value of the three (two calculated values and 0.27) is applied to calculate Q_N2O_by-pass (see this parameter for details)				

QA/QC procedures applied:	Data Handling Protocol - ISAL-ADOH-QA-007

Data / Parameter:	**Q_N_2O**				
Data unit:	kg				
Description:	Quantity of N_2O produced				
Measured /Calculated /Default:	Calculated value				
Source of data:	Excel Workbook based on P_AdOH and N_2O_/AdOH data				
Value(s) of monitored parameter:		From	To	Q_N_2O	
	Period Value:	15/02/2012	31/03/2012	2,700,315	
	Monthly Values:	15/02/2012	29/02/2012	957,013	
		01/03/2012	31/03/2012	1,743,302	
Data used for:	Baseline Emissions				
Monitoring equipment	Not applicable				
Measuring/ Reading/ Recording frequency:	Measuring not applicable/Recorded monthly				
Calculation method (if applicable):	Q_N_2O = P_AdOH x N_2O_/AdOH Only the adipic acid production after cap application is used to determine the baseline emission				
QA/QC procedures applied:	Data Handling Protocol - ISAL-ADOH-QA-007				

Data / Parameter:	**Q_N_2O reg**
Data unit:	kg
Description:	Allowed N_2O emission
Measured /Calculated /Default:	Default value
Source of data:	Brazilian legislation
Value(s) of monitored parameter:	Not applicable
Data used for:	Baseline Emissions
Monitoring equipment	Not applicable
Measuring/ Reading/ Recording frequency:	At date of the regulatory value introduction or change of the regulation

Calculation method (if applicable):	Not applicable
QA/QC procedures applied:	Rhodia follows the evolution of Brazilian legislation about N_2O emissions that could affect the project Emission Reduction through the parameters N_2O_reg / AdOH, Q_N_2O reg, or ry as part of the ISO 14000 requirements. Experts on environmental matters from Rhodia Brazil follow closely any project or change in the laws and regulations.They participate in external organizations such as ABIQUIM (Brazilian Association of Chemical Industries) and meetings organized by CETESB (local environmental agency).

Data / Parameter:	**N_2O reg/AdOH**
Data unit:	kg/kg
Description:	kg of allowed N_2O emission / kg of adipic acid produced
Measured /Calculated /Default:	Default value
Source of data:	Brazilian legislation
Value(s) of monitored parameter:	Not applicable
Data used for:	Baseline Emissions
Monitoring equipment	Not applicable
Measuring/ Reading/ Recording frequency:	At date of the regulatory value introduction or change of the regulation
Calculation method (if applicable):	Not applicable
QA/QC procedures applied:	Rhodia follows the evolution of Brazilian legislation about N_2O emissions that could affect the project Emission Reduction through the parameters N_2O_reg / AdOH, Q_N_2O reg, or ry as part of the ISO 14000 requirements. Experts on environmental matters from Rhodia Brazil follow closely any project or change in the laws and regulations. They participate in external organizations such as ABIQUIM (Brazilian Association of Chemical Industries) and meetings organized by CETESB (local environmental agency).

Data / Parameter:	**r_y**
Data unit:	%
Description:	Share of N_2O emissions required to be destroyed
Measured /Calculated /Default:	Default value

Source of data:	Brazilian legislation
Value(s) of monitored parameter:	Not applicable
Data used for:	Baseline Emissions
Monitoring equipment	Not applicable
Measuring/ Reading/ Recording frequency:	At date of the regulatory value introduction or change of the regulation
Calculation method (if applicable):	Not applicable
QA/QC procedures applied:	Rhodia follows the evolution of Brazilian legislation about N_2O emissions that could affect the project Emission Reduction through the parameters N_2O_reg / AdOH, Q_N_2O reg, or ry as part of the ISO 14000 requirements. Experts on environmental matters from Rhodia Brazil follow closely any project or change in the laws and regulations. They participate in external organizations such as ABIQUIM (Brazilian Association of Chemical Industries) and meetings organized by CETESB (local environmental agency).

Data / Parameter:	**P N_2O**
Data unit:	€/t
Description:	Market price of N_2O
Measured /Calculated /Default:	Estimated
Source of data:	Market Survey (last up-date September 2011)
Value(s) of monitored parameter:	Zero (0) (there is no N_2O market for the N_2O produced as by-product of adipic acid in Paulinia)
Data used for:	Baseline Emissions
Monitoring equipment	Not applicable
Measuring/ Reading/ Recording frequency:	Annual update based on permanent market survey
Calculation method (if applicable):	Not applicable
QA/QC procedures applied:	Not applicable

Data / Parameter:	**Q_Steam_p**				
Data unit:	kg of steam				
Description:	Amount of steam produced by the decomposition process				
Measured /Calculated /Default:	Measured				
Source of data:	The data are automatically acquired continuously by DCS and stored in the PIMS.				
Value(s) of monitored parameter:		From	To	Q_Steam_p	
	Period Value:	15/02/2012	31/03/2012	11,372,100	
	Monthly Values:	15/02/2012	29/02/2012	3,663,600	
		01/03/2012	31/03/2012	7,708,500	
Data used for:	Baseline Emissions				
Monitoring equipment (type, accuracy class, calibration frequency, date of last calibration, validity):	**Equipment**	**Type**	**Accuracy class**	**Calibration frequency**	**Calibration Information**
	40 bar steam flow meter (FQ-3470) Serial number 7072986	Orifice plate flow – Multi variable transmitter	+/- 1.2 %	1/year	Last calibration
					28/09/2011
					Valid until
					27/09/2012
	Boiler feed water flow meter (FQ-3410) Serial number 91F348990612	Orifice plate flow - Differential pressure (back-up from FQ-3470)	+/- 0.65 %	1/year	Last calibration
					27/09/2011
					Valid until
					26/09/2012
Measuring/ Reading/ Recording frequency:	Measured continuously and recorded daily/Aggregated monthly				
Calculation method (if applicable):	Not applicable				
QA/QC procedures applied:	Data Handling Protocol - ISAL-ADOH-QA-007				

Data / Parameter:	**E_Steam**
Data unit:	kg CO_2/kg of steam
Description:	CO_2 emission factor of steam produced by facility
Measured /Calculated /Default:	Calculated
Source of data:	Excel Workbook based on QNG_tsteam and E_NG

Value(s) of monitored parameter:	0.144
Data used for:	Baseline Emissions
Monitoring equipment (type, accuracy class, calibration frequency, date of last calibration, validity):	Not applicable
Measuring/ Reading/ Recording frequency:	Measuring not applicable/ Updated for each monitoring period
Calculation method (if applicable):	The rolling year value of E_Steam is calculated with the data available for the 12 months prior to the beginning of the period in order to assure to have the data. The emission factor is obtained by the formula below: E_Steam = (QNG_tsteam/1,000) * E_NGy QNG_steam = ΔH (kJ/t) / (LHV (kJ/Nm^3) x η (%)) Where: QNG_steam: amount of natural gas required to generate steam (Nm^3/t) The LHV data is the yearly average value for the gas supplied by COMGAS. The yield η (%) of the boiler is conservatively taken as 97%, while the yield is generally below 90% E_NGy: yearly average value for the gas supplied by COMGAS (kg CO_2/Nm^3) Year Ending on: 01/02/2012

LHV kJ/Nm^3	△H kJ/t	η %	QNG_tsteam Nm^3/t of steam	E_NGy kg-CO_2/Nm^3
38,569	2,624,000	97	65.99	2.197

QA/QC procedures applied:	Data Handling Protocol - ISAL-ADOH-QA-007

Data / Parameter:	**CO_2_Steam_p**
Data unit:	t CO_2e
Description:	CO_2 Emissions from Steam Production
Measured /Calculated /Default:	Calculated

Source of data:	Excel Workbook based on Q_Steam_p and E_Steam data				
Value(s) of monitored parameter:		From	To	CO_2_Steam_p	
	Period Value:	15/02/2012	31/03/2012	1,637	
	Monthly Values:	15/02/2012	29/02/2012	527	
		01/03/2012	31/03/2012	1,110	
Data used for:	Baseline Emissions				
Monitoring equipment (type, accuracy class, calibration frequency, date of last calibration, validity):	Not applicable				
Measuring/ Reading/ Recording frequency:	Measuring not applicable/Calculated monthly				
Calculation method (if applicable):	Calculated monthly and expressed in tonnes, using Q_Steam_p and E_Steam CO2_Steam_p = Q_Steam_p x E_Steam				
QA/QC procedures applied:	Data Handling Protocol - ISAL-ADOH-QA-007				

Data / Parameter:	**Q_GE**				
Data unit:	Nm^3				
Description:	Volume of effluent gas leaving the stack				
Measured /Calculated /Default:	Measured				
Source of data:	The data are automatically acquired continuously by DCS and stored in the PIMS				
Value (s) of monitored parameter:		From	To	Q_GE	
	Period Value:	15/02/2012	31/03/2012	12,586,929	
	Monthly Values:	15/02/2012	29/02/2012	4,366,632	
		01/03/2012	31/03/2012	8,220,297	
Data used for:	Project Emissions				

Monitoring equipment (type, accuracy class, calibration frequency, date of last calibration, validity):	**Equipment**	**Type**	**Accuracy class**	**Calibration frequency**	**Calibration Information**
	Gas flow meter (FQ-3490) Serial number 7072985	Annubar gas flow meter-Multivariable transmitter on wet basis	+/- 2.5 %	1/year	Last calibration
					30/09/2011
					Valid until
					29/09/2012
Measuring/ Reading/ Recording frequency:	Measured continuously and recorded daily/Aggregated monthly				
Calculation method (if applicable):	Not applicable				
QA/QC procedures applied:	Data Handling Protocol ISAL-ADOH-QA-007				

Data / Parameter:	**N_2O_GE**				
Data unit:	vppm				
Description:	Concentration of N_2O in the effluent gas				
Measured /Calculated /Default:	Measured				
Source of data:	The data are automatically acquired continuously by DCS and stored in the PIMS				
Value (s) of monitored parameter:		From	To	N_2O_GE	
	Period Value:	15/02/2012	31/03/2012	11.6	
	Monthly Values:	15/02/2012	29/02/2012	13.8	
		01/03/2012	31/03/2012	10.4	
Data used for:	Project Emissions				
Monitoring equipment (type, accuracy class, calibration frequency, date of last calibration, validity):	**Equipment**	**Type**	**Accuracy class**	**Calibration frequency**	**Calibration Information**
	N_2O analyzer (AI-3490B) Serial number 17008	Gas analyzer, type in-situ and laser diode on wet basis	+/- 5 % of reading	2/year	Last calibration
					28/03/2012
					Valid until
					27/09/2012
	N_2O analyzer (AI-3490G) Serial number 450561464363	Back-up Analyzer Gas analyzer, type extractive and infrared	+/- <1.0 %	1/week	Last calibration
					29/03/2012
					Valid until
					following week
Measuring/ Reading/ Recording frequency:	Measured continuously and recorded daily/Aggregated monthly				

Calculation method (if applicable):	The daily average concentration on wet basis is calculated in the DCS as the flow averaged value of instantaneous concentration values measured every 10 sec: $N_2O_GE = \Sigma (Q_GE \times N_2O_GE) / Q_GE$
QA/QC procedures applied:	Data Handling Protocol ISAL-ADOH-QA-007

Data / Parameter:	**ND_N_2O**				
Data unit:	kg				
Description:	Quantity of N_2O in the effluent gas leaving the stack				
Measured /Calculated /Default:	Calculated				
Source of data:	The data are automatically acquired continuously by DCS and stored in the PIMS				
Value (s) of monitored parameter:		From	To	ND_N_2O	
	Period Value:	15/02/2012	31/03/2012	287	
	Monthly Values:	15/02/2012	29/02/2012	119	
		01/03/2012	31/03/2012	168	
Data used for:	Project Emissions				
Monitoring equipment (type, accuracy class, calibration frequency, date of last calibration, validity)	Not applicable				
Measuring/ Reading/ Recording frequency:	Measured continuously and recorded daily/Aggregated monthly				
Calculation method (if applicable):	The daily value of non destroyed N_2O (N_2O_ND) is calculated on-line in the DCS by integrating the product of the instantaneous concentration of N_2O by the flow rate of the gaseous effluent, both measured on a wet basis (Method C of EB61 – "Tool to determine the mass flow of a greenhouse gas in a gaseous stream") : $ND_N_2O = Q_GE \times N_2O_GE \times Specific_gravity_of_N_2O$ The specific gravity of $N_2O = 44/22.414 \times 10^{-6}$ is used to transform vppm in kg/Nm^3 When the instant value indicated by AI-3490B is lower than 5 vppm (detection limit), the value of 5 vppm is used in the equation above.				
QA/QC procedures applied:	Data Handling Protocol ISAL-ADOH-QA-007				

Data / Parameter:	**Q_NG**				
Data unit:	Nm^3				
Description:	Amount of natural gas used by the decomposition process				
Measured /Calculated /Default:	Measured				
Source of data:	The data are automatically acquired continuously by DCS and stored in the PIMS.				
Value (s) of monitored parameter:		From	To	Q_NG	
	Period Value:	15/02/2012	31/03/2012	933,456	
	Monthly Values:	15/02/2012	29/02/2012	314,696	
		01/03/2012	31/03/2012	618,760	
Data used for:	Project Emissions				
Monitoring equipment (type, accuracy class, calibration frequency, date of last calibration, validity)	**Equipment**	**Type**	**Accuracy class**	**Calibration frequency**	**Date of last calibration**
	Gas flow meter (FQ-3408) Serial number IB-2298	Gas flow meter	+/- 0.5 %	2 years	Last calibration
					29/02/2012
					Valid until
					27/02/2014
	Gas flow meter (FQ-3460) (back-up from FQ-3408) Serial number IB-2095	Gas flow meter	+/- 0.5 %	2 years	Last calibration
					03/10/2011
					Valid until
					02/10/2013
Measuring/ Reading/ Recording frequency:	Measured continuously and recorded daily/Aggregated monthly				
Calculation method (if applicable):	Not applicable				
QA/QC procedures applied:	Data Handling Protocol ISAL-ADOH-QA-007				

Data / Parameter:	**E_NGy**
Data unit:	kg CO_2/Nm^3
Description:	Emissions coefficient for natural gas combustion
Measured /Calculated /Default:	Calculated
Source of data:	Excel Workbook based on NGC

Value (s) of monitored parameter:	2.197
Data used for:	Project Emissions
Monitoring equipment (type, accuracy class, calibration frequency, date of last calibration, validity)	Not applicable
Measuring/ Reading/ Recording frequency:	Measuring not applicable/Updated each period
Calculation method (if applicable):	The emissions coefficient is calculated according to the PDD Monitoring Plan. For the 12 months preceding the monitoring period, the CO_2 quantity emitted by the combustion of the natural gas from all the gas boilers is summed up and divided by the total quantity of natural gas consumed in Nm^3 over the same 12 months period. The CO_2 quantity emitted is obtained by multiplying the emission factor of the month (based on the gas composition of the month) by the quantity of natural gas burned in the same month, using the formulae described in section E1 of the PDD.
QA/QC procedures applied:	Data Handling Protocol ISAL-ADOH-QA-007

Data / Parameter:	**NGC**
Data unit:	% vol
Description:	Natural gas composition required for the calculation of E_NG
Measured /Calculated /Default:	Measured by COMGAS (supplier company)
Source of data:	Natural gas supplier COMGAS

Value (s) of monitored parameter:	**Component**	**Number of C**	**Feb-12**	**Mar-12**	
	CH_4 (Methane)	1	89.41	88.30	
	C_2H_6 (Ethane)	2	5.86	6.35	
	C_3H_8 (Propane)	3	1.74	1.99	
	I-C_4H_{10} (i-Isobutane)	4	0.27	0.29	
	N-C_4H_{10} (n-Butane)	4	0.38	0.42	
	C_5H_{12} (i-Pentane)	5	0.11	0.12	
	C_5H_{12} (n-Pentane)	5	0.09	0.08	
	C_6H_{14} (Hexane)	6	0.06	0.10	
	N_2 (Nitrogen)	0	0.69	0.76	
	CO_2 (Carbon dioxide)	1	1.39	1.58	
	Average number of C		1.12	1.13	
	E_NG_m (kg CO_2/Nm^3)		2.195	2.222	
Data used for:	Project Emissions				
Monitoring equipment	Not applicable				
Measuring/ Reading/ Recording frequency:	Measuring not applicable/Recorded monthly				
Calculation method (if applicable):	NGC is use to calculate the E_NG monthly value. The average number of C in a mole of NG is calculated from the composition = Σ (number of C in each mole) x (volume ratio). The CO_2 specific gravity in normal conditions is 1.965 kg/Nm^3. E_NG = 1.965 x (average number of C) For this monitoring period, natural gas composition from March 2012 is not yet available, so to be conservative, the NGC of the month of August 2008 was used for March as it gives the highest E_NG value since the beginning of the crediting period (19/11/2006).				
QA/QC procedures applied:	Data Handling Protocol ISAL-ADOH-QA-007				

Data / Parameter:	**CO_2_NG**				
Data unit:	t CO_2				
Description:	CO_2 Emissions for Natural Gas				
Measured /Calculated /Default:	Calculated				
Source of data:	Excel Workbook calculated from Q_NG and E_NG				
Value (s) of monitored parameter:		From	To	CO_2_NG	
	Period Value:	15/02/2012	31/03/2012	2,066	
	Monthly values:	15/02/2012	29/02/2012	691	
		01/03/2012	31/03/2012	1,375	
Data used for:	Project Emissions				
Monitoring equipment (type, accuracy class, calibration frequency, date of last calibration, validity)	Not applicable				
Measuring/ Reading/ Recording frequency:	Measuring not applicable/Calculated monthly				
Calculation method (if applicable):	CO_2_NG is calculated monthly and expressed in tonnes using the monthly values of Q_NG and E_NG $CO_2_NG_m = Q_NG_m \times E_NG_m$ The value of the period is the sum of the monthly values of the period				
QA/QC procedures applied:	Data Handling Protocol ISAL-ADOH-QA-007				

Data / Parameter:	**%_on-line**				
Data unit:	% of production time				
Description:	% of production time that N2O is feeding the destruction facility				
Measured /Calculated /Default:	Measured				
Source of data:	The data are automatically acquired continuously by DCS and stored in the PIMS.				
Value (s) of monitored parameter:		From	To	%_on-line	
	Period Value:	15/02/2012	31/03/2012	99.360	
	Monthly Values:	15/02/2012	29/02/2012	100.000	
		01/03/2012	31/03/2012	99.015	
Data used for:	Project Emissions				

Monitoring equipment (type, accuracy class, calibration frequency, date of last calibration, validity)	**Equipment**	**Type**	**Accuracy class**	**Calibration frequency**	**Calibration Information**
	By-pass valve (HV-3402) Serial number not applicable	Butterfly valve	below 1% relative accuracy on %_on-line parameter	1/year	Last calibration 15/02/2012 Valid until 14/02/2013
Measuring/ Reading/ Recording frequency:	Measured continuously and recorded daily/Aggregated monthly				
Calculation method (if applicable):	The %_on-line is recorded on a daily basis and is the ratio between the time of production of adipic acid while the unit is connected to the N_2O destruction facility and the time of production. At the end of the month/period (y), %_on-line is calculated as: $\%_on\text{-}line_y = 1 - (Q_N_2O_by\text{-}pass_y/(P_AdOH_y \times N_2O_/AdOH_y)$ where $N2O_/AdOH_y$ is the actual value of the month/period				
QA/QC procedures applied:	Data Handling Protocol ISAL-ADOH-QA-007				

Data / Parameter:	**$Q_N_2O_by\text{-}pass$**				
Data unit:	kg				
Description:	N_2O by passing the decomposition facility				
Measured /Calculated /Default:	Calculated				
Source of data:	The data are automatically acquired continuously by DCS and stored in the PIMS.				
Value (s) of monitored parameter:		From	To	$Q_N_2O_bypass$	$N_2O_/AdOH$ Calculated (Actual)
	Period Value:	15/02/2012	31/03/2012	18,760	0.293
	Monthly Values:	15/02/2012	29/02/2012	0	0.291
		01/03/2012	31/03/2012	18,760	0.295
Data used for:	Project Emissions				
Monitoring equipment	Not applicable				
Measuring/ Reading/ Recording frequency:	Calculated and recorded daily/Aggregated monthly				

Calculation method (if applicable):	The quantity of N_2O that by-pass the facility is calculated following AM0021/version1: · $Q_N_2O_by\text{-}pass_d = Q_N_2O_d$ x (1 - %_on-line) for each day (d) $Q_N2O_d = P_AdOH_d$ x N2O_/AdOH where N2O_/AdOH is the actual value (considering that it is higher than 0.27) following the final ruling regarding the request for issuance of CERs "N2O decomposition project of PetroChina Company Limited Liaoyang Petrochemical Company" (EB61). · $Q_N_2O_by\text{-}pass_d = P_AdOH_d$ x N_2O_/AdOH x $(1 - \%_on\text{-}line)_d$ At the end of the month or period the quantity of N_2O that by-passed the facility is summed for all days: · $Q_N_2O_by\text{-}pass_y = \Sigma\ (Q_N_2O_by\text{-}pass_d)$
QA/QC procedures applied:	Data Handling Protocol ISAL-ADOH-QA-007

Data / Parameter:	**Q_Power**				
Data unit:	kWh				
Description:	Electric consumption of the decomposition facility				
Measured /Calculated /Default:	Measured				
Source of data:	The data are automatically acquired continuously by DCS and stored in the PIMS.				
Value (s) of monitored parameter:		From	To	Q_Power	
	Period Value:	15/02/2012	31/03/2012	57,621.1	
	Monthly Values:	15/02/2012	29/02/2012	18,062.7	
		01/03/2012	31/03/2012	39,558.4	
Data used for:	Leakage				
Monitoring equipment (type, accuracy class, calibration frequency, date of last calibration, validity)	**Equipment**	**Type**	**Accuracy class**	**Calibration frequency**	**Calibration Information**
	Electricity meter (JI-3461) Serial number 40072320-4	Electricity meter	+/- 0.20 %	2 years	Last calibration 27/07/2010 Valid until 26/07/2012
Measuring/ Reading/ Recording frequency:	Measured continuously and recorded daily/Aggregated monthly				
Calculation method (if applicable):	The daily values are automatically generated in the DCS, the monthly values are obtained in the workbook by the sum of the daily values				

QA/QC procedures applied:	Data Handling Protocol ISAL-ADOH-QA-007

Data / Parameter:	**E_Power**
Data unit:	kg CO_2/kWh
Description:	CO_2 intensity for electric generation
Measured /Calculated /Default:	Calculated
Source of data:	Excel Workbook based on the data provided by Department of Utilities from Paulínia Site, considering the two sources of data obtained with: 1. ONS (Operador Nacional do Sistema Elétrico) http://www.ons.com.br/biblioteca_virtual/publicacoes_operacao_sin.aspx 2. Brazilian Ministry of Mines and Energy (MME) http://www.mme.gov.br/mme/menu/todas_publicacoes.html
Value (s) of monitored parameter:	0.818
Data used for:	Leakage
Monitoring equipment	Not applicable
Measuring/ Reading/ Recording frequency:	Measuring not applicable/Calculated and recorded yearly
Calculation method (if applicable):	The E_Power was done using the latest available data from 2010. It is calculated according to the PDD monitoring plan based on ACM0002 version 2. E_Power is calculated by taking into account only the emission factors of the fossil-fuel electricity generation (simple OM). As explained in the PDD Monitoring Plan, ONS still does not supply the plant-specific data required for BM (build margin) calculation. This is a very conservative approach since only around 7% of the total electricity supplied to the grid is generated using fossil fuels in 2010 (93% of Hydro and Nuclear). The detailed calculation is available in the Excel file "Workbook ER Paulínia" of this period (in the worksheet "E_Power") which is a confidential document communicated to the DOE and to the CDM Executive Board.
QA/QC procedures applied:	Data Handling Protocol ISAL-ADOH-QA-007

Data / Parameter:	**CO_2_Power**
Data unit:	t CO_2
Description:	CO_2 Emissions from Electricity consumption

Measured /Calculated /Default:	Calculated				
Source of data:	Excel workbook based on Q_Power and E_Power data				
Value(s) of monitored parameter:		From	To	CO_2_Power	
	Period Value:	15/02/2012	31/03/2012	48	
	Monthly Values:	15/02/2012	29/02/2012	15	
		01/03/2012	31/03/2012	33	
Data used for:	Leakage				
Monitoring equipment	Not applicable				
Measuring/ Reading/ Recording frequency:	Measuring not applicable/Calculated monthly				
Calculation method (if applicable):	Calculated monthly and expressed in tonnes, using Q_Power and E_Power CO2_Power= Q_Power x E_Power				
QA/QC procedures applied:	Data Handling Protocol ISAL-ADOH-QA-007				

Data / Parameter:	**Q_Steam_c**				
Data unit:	kg				
Description:	Amount of steam consumed by the decomposition facility				
Measured /Calculated /Default:	Measured				
Source of data:	The data are automatically acquired continuously by DCS and stored in the PIMS.				
Value (s) of monitored parameter:		From	To	Q_Steam_c	
	Period Value:	15/02/2012	31/03/2012	41,100	
	Monthly Values:	15/02/2012	29/02/2012	14,600	
		01/03/2012	31/03/2012	26,500	
Data used for:	Leakage				
Monitoring equipment (type, accuracy class, calibration frequency, date of last calibration, validity)	**Equipment**	**Type**	**Accuracy class**	**Calibration frequency**	**Calibration Information**
	6.5 bar steam flow meter (FQ-3409) Serial number 6270424	Orifice plate flow - Multivariable transmitter	+/- 1.25 %	1/year	Last calibration 03/01/2012 Valid until 02/01/2013
Measuring/ Reading/ Recording frequency:	Measured continuously and recorded daily/Aggregated monthly				

Calculation method (if applicable):	Not applicable
QA/QC procedures applied:	Data Handling Protocol ISAL-ADOH-QA-007

Data / Parameter:	**E_Steam_c**
Data unit:	kg CO_2/kg of steam
Description:	CO_2 intensity for steam consumed in the facility
Measured /Calculated /Default:	Calculated
Source of data:	Excel workbook based on the E_Steam_c_NG, %GEN_NG, and E_Steam_c_chem&oil supplied by the Rhodia Paulínia Industrial Platform
Value (s) of monitored parameter:	0.215
Data used for:	Leakage
Monitoring equipment	Not applicable
Measuring/ Reading/ Recording frequency:	Measuring not applicable/Updated for each period
Calculation method (if applicable):	The steam consumed in the facility is supplied by existing boilers on site. E_Steam_c is calculated on a rolling year basis following the PDD in three steps. First we calculate E_Steam_c_NG, the CO_2 emission per kg of steam produced by the natural gas boilers. Second we calculate E_Steam_c_chem&oil, which is the CO_2 emission per kg of steam produced by the boilers running on by-products and fuel oil. Finally E_Steam_c is calculated by weighting E_Steam_c_NG and E_Steam_c_chem&oil with their real share in the total steam production The E_Steam_c is obtained by rounding up the following calculation: E_Steam_c = E_Steam_c_NG x %GEN_NG + E_Steam_c_chem&oil x (1-%GEN_NG)

Year ending	E_Steam_c_NG kg CO_2 / kg of steam	E_Steam_c_chem&oil kg CO_2 / kg of steam	%GEN_NG	E_Steam_c kg CO_2 / kg of steam
01/02/2012	0.210	0.291	94.5	0.215

QA/QC procedures applied:	Data Handling Protocol ISAL-ADOH-QA-007

Data / Parameter:	**CO_2_Steam_c**				
Data unit:	t CO_2				
Description:	CO_2 Emissions from Steam consumption				
Measured /Calculated /Default:	Calculated				
Source of data:	Calculated from Q_Steam_c and E_Steam_c data				
Value(s) of monitored parameter:		From	To	CO_2_Steam_c	
	Period Value:	15/02/2012	31/03/2012	10	
	Monthly Values:	15/02/2012	29/02/2012	4	
		01/03/2012	31/03/2012	6	
Data used for:	Leakage				
Monitoring equipment	Not applicable				
Measuring/ Reading/ Recording frequency:	Measuring not applicable/Calculated monthly				
Calculation method (if applicable):	Calculated monthly and expressed in tonnes, using Q_Steam_c and E_Steam_c CO2_Steam_c= Q_Steam_c x E_Steam_c				
QA/QC procedures applied:	Data Handling Protocol ISAL-ADOH-QA-007				

Data / Parameter:	**NOx**
Data unit:	**vppm**
Description:	NO + NO_2 concentration in the stack gas Monitoring of the NOx content in the waste gas is required by local environmental legislation stated in the Commitment Agreement (TAC) signed with the Public Attorney of the State of São Paulo. NOx in the gaseous effluent can be randomly checked by the environmental agency Cetesb through sampling and analysis by an external laboratory. Analytical data show that the plant complies with the established environmental standard.
Measured /Calculated /Default:	Measured
Source of data:	The data are automatically acquired continuously by DCS and stored in the PIMS.

Value (s) of monitored parameter:	**Parameter**	**Unit**	**Limit**	**Analytical results in this period**	
	NOx	vppm	300 max at least 95% of time	Average of 61 and less than 300 for 99.16% of time	
Data used for:	Compliance with local regulation on NOx				
Monitoring equipment (type, accuracy class, Calibration frequency, date of last calibration, validity)	**Equipment**	**Type**	**Accuracy Class**	**Calibration frequency**	**Calibration information**
	AI-3490A (NO) serial number 450561464363	3490A (Infrared)	+/- <1 %	1/week	Last calibration 29/03/2012 Valid until following week
	AI-3490F (NO_2) serial number 450561464363	3490F (Ultraviolet)	+/- <1 %	1/week	Last calibration 29/03/2012 Valid until following week
Measuring/Recording frequency:	Measured continuously and recorded daily/Aggregated monthly				
Calculation method (if applicable):	Not applicable				
QA/QC procedures applied:	Procedure UQP-3-ADO-QA-006				

For other additional informations about the equipments cited above consult the Annex 1.

SECTION E. Emission reductions calculation

E.1. Baseline emissions calculation

The amount of baseline emissions in the given period y (measured in tCO_2e) is calculated using the following formula according to AM0021/version 1, equation (1):

$$BE_y = Q_N_2O_y \times GWP_N_2O + Q_Steam_p_y \times E_Steam_y$$

It has been checked that there are no Brazilian regulation in place that would limit the quantity of N_2O emitted that can be taken into account for the calculation of the baseline emissions (see D.2.1.4. in the PDD).
The quantity $Q_N_2O_y$ of N_2O emitted over the period can then be calculated by (AM0021/version 1 equation (2)):

$$Q_N_2O_y = P_AdOH_y \text{ x } N_2O_/AdOH_y$$

Over the period of reference the emission factor of the adipic acid plant was above the capped value of 0.27 kg N_2O/kg AdOH (see: D.2). So the capped value is being used according to AM 0021/version 1. The baseline emissions in this monitoring period are calculated in the table below using the values detailed in section D.1 and D.2 above:

Parameter	Value	Unit
$Q_N_2O_y$	2,700,315	kg
P_AdOH_y (eligible)	10,001.173	t
$N_2O_/AdOH_y$ (used for baseline)	0.27	kg N_2O/kg AdOH
Q_N_2O reg	No limit	
N_2O_reg / AdOH	No limit	
r_y	NA	
GWP_N_2O (1)	310	$kgCO_2e$/kg N_2O
$Q_Steam_p_y$	11,372,100	kg of Steam
E_Steam_y	0.144	kg CO_2/kg of Steam
BEy	**838,734**	**tCO_2e**

(1) Kyoto Protocol Rule, Decision 2/CP.3 and IPCC

By manual calculation of BEy the result may differ slightly from the more accurate value of the workbook shown above due to rounding down effects applied to remain conservative.

E.2. Project emissions calculation

According to AM0021, version 1, the project emissions PE_y are the emissions in the period y due to:

- the N_2O that has not been sent to the decomposition process (i.e. the N_2O that by-passed the decomposition facility)
- the N_2O non-destroyed by the decomposition process
- the emissions due to the use of natural gas.

PE_y is calculated as follows:

$PE_y = (Q_N_2O_by\text{-}pass_y + ND_N_2O_y) \times GWP_N_2O + Q_NG_y \times E_NG_y$ (AM0021/version 1 equation (5))

With $CO_2_NG = Q_NG \times E_NG$ (PDD section E.1) we get:

$PE_y = (Q_N_2O_by\text{-}pass_y + ND_N_2O_y) \times GWP_N_2O + CO_2_NG_y$, where:

$Q_N2O_by\text{-}pass_y = \sum [P_AdOH_d \times (1 - \%_on\text{-}line_d) \times N2O_/AdOH]$

Where, N2O_/AdOH is the actual value of the emission factor, following the outcome of the Request for Review for project 1238 (Monitoring Period 01/12/2009 to 13/03/2010).

$ND_N2O_y = \sum [Q_GE_d \times N2O_GE_d \times \text{Specific gravity of_N2O} \times 10^{-6}]$

The project emissions in this monitoring period are calculated in the table below using the values presented in detail in section D:

Parameter	Value	Unit
P_AdOH_y	10,001.173	t
$N_2O_/AdOH_y$	0.293	kg N_2O/kg AdOH
$\%_on\text{-}line_y$	99.360	%
$Q_N_2O_by\text{-}pass_y$	18,760	kg
Q_GE_y	12,586,929	Nm^3
$N_2O_GE_y$	11.6	vppm
Specific gravity of_N_2O	1.963	kg/Nm^3
$ND_N_2O_y$	287	kg N_2O
GWP_N_2O (1)	310	$kgCO_2e/kg\ N_2O$
CO_2_NGy	2,066	tCO_2e
PEy	**7,972**	tCO_2e

(1) Kyoto Protocol Rule, Decision 2/CP.3 and IPCC

Q_N_2O_by-pass and ND_N_2O in kg need to be divided by 1,000 to get PE in t CO_2e.

Q_N2O_by-pass is aggregated monthly using the monthly values of N2O_/AdOH, and summed up for the period. It does not use the accumulated period value of N2O_/AdOH given for information in the table above (see details in section D).

By manual calculation of PE_y the result may differ slightly from the more accurate value of the workbook shown above due to rounding up effects to remain conservative.

E.3. Leakage calculation

Leakage emissions L_y in a given period y comprise the emissions associated with the energy sources used to generate any steam and electricity used by the decomposition plant.

Leakage is calculated according to (AM0021/version 1 equation (7)):

L_y = Q_Power_y x E_Power + $Q_steam_c_y$ x $E_steam_c_y$

The leakage emissions in this monitoring period are calculated in the table below using the values presented in the detail in section D:

Parameter	Value	Unit
Q_Power_y	57,621.1	kWh
E_Power	0.818	kg CO_2/kWh
Q_Steam_ c_y	41,100	kg
$E_Steam_c_y$	0.215	kg CO_2/kg of steam
Ly	**58**	tCO_2e

By manual calculation of Ly the result may differ slightly from the more accurate value of the workbook shown above due to rounding up effects to remain conservative.

E.4. Emission reductions calculation / table

Following the methodology AM0021/version 1 and the PDD section D.2.4, the total emission reductions achieved by this project activity during this monitoring period is:

$$\mathbf{ER_y = BE_y - PE_y - L_y}$$

where:

- **BEy** = $Q_N_2Oy \times GWP_N_2O + Q_Steam_py \times E_Steamy$
- **PEy** = $(Q_N_2O_by\text{-}passy + ND_N_2Oy) \times GWP_N_2O + CO_2_NGy$
- $\mathbf{L_y}$ = Q_Power_y x E_Power + $Q_steam_c_y$ x $E_steam_c_y$

For this project activity, during this monitoring period, was achieved:

$\mathbf{ER_y}$ = (838,734 **– 7,972 – 58)** tCO_2e
$\mathbf{ER_y}$ = **830,704** tCO_2e

E.5. Comparison of actual emission reductions with estimates in the CDM-PDD

In the PDD section E the emission reduction is estimated to be 5,961,165 tCO_2e. So the PDD-estimated emission reduction relative to the monitoring period of 46 days is around 751,267 tCO_2e.

Item	Values applied in ex-ante calculation of the registered CDM-PDD	Actual values reached during the monitoring period
BEy (tCO_2e)	898,496	838,734
PEy (tCO_2e)	147,074	7,972
Ly (tCO_2e)	155	58
Emission reductions (tCO_2e)	**751,267**	**830,704**

E.6. Remarks on difference from estimaded value

BE: PDD value = 898,496 tCO_2e Period = 838,734 tCO_2e	
Variance	Explanation
- 59,524	The adipic acid production used for the ex-ante emission reduction was conservatively taken as 85,000 t/y (232.8 t/d) which is only 89.6% of the nameplate capacity (260 t/d). The daily average production for this period was lower (around 217 t/d) than the estimate of the PDD.
- 238	Steam produced in period was lower than in PDD estimate
- 59,762	**Total BE variance**

It is important to note that according to the methodology AM0021/version 1, the eligible adipic acid production that can be used in the baseline is yearly capped, so it limits on a yearly basis the emission reduction calculation claimed for CERs. Please refer to item E.1 for details.

PE: PDD value = 147,074 tCO_2e Period = 7,972 tCO_2e	
Variance	Explanation
128,697	The significant higher performance of the N_2O abatement unit (the actual %_on-line of 99.360% in this period is significantly higher than the value of 85% estimated in the PDD due to excellent operational performance). The estimate of 85% in the PDD assumed a low performance rate of the destruction equipment due to the lack of experience with such equipment.
9,599	A higher destruction rate of the N_2O which is around 99.99% during this period versus 99% taken conservatively in the PDD.
806	Difference in the natural gas consumption estimate and actual in the period
139,102	**Total PE variance**

L: PDD value = 155 tCO_2e Period = 58 t CO_2e	
Variance	Explanation
97	Difference mainly due to the quantity of steam consumed
97	**Total L variance**

The actual emission reductions determined in this monitoring period are higher than the *pro rata* estimation based on the *ex-ante* calculation made in the PDD, as explained above. This is to be expected because, given the general experiences with constant overestimation of CER volumes in the first years of CDM project development, Rhodia wanted to set the CER estimates in the PDD in a conservative fashion, especially regarding performance of the abatement equipment.

Annex 1 – Table of Equipments/General Information

INSTRUMENT CALIBRATION & MAINTENANCE STATUS

Related PDD parameter	Instrument Location/Description	Tag Number	Parameter in PDD	Reference	Frequency	Work Done by	Previous calibration dates	Last calibration date	Remarks
P_AdOH	Packaging machine 25 kg	Z-3110	Dry AA (P_AdOH)	INMETRO - Brazil Standard Portaria no. 236 (22December1994)	1/month	Third party	19/1/2012 16/02/2012	15/03/2012	
P_AdOH	Packaging machine 25 kg	G-2532	Dry AA (P_AdOH)	INMETRO - Brazil Standard Portaria no. 236 (22December1994)	1/month	Third party	19/01/2012 16/02/2012	15/03/2012	
P_AdOH	Weigh scale 1000 kg	Z-3120	Dry AA (P_AdOH)	INMETRO - Brazil Standard Portaria no. 236 (22December1994)	4/year	Third party	07/07/2011 29/09/2011 22/12/2011	15/03/2012	
P_AdOH	Trucks weigh scale	BB-0090	N-salt production (P_AdOH)	INMETRO - Brazil Standard Portaria no. 236 (22December1994)	2/year	Third party	08/05/2011	21/10/2011	
P_AdOH	Trucks weigh scale	BB-0335	N-salt production (P_AdOH)	INMETRO - Brazil Standard Portaria no. 236 (22December1994)	2/year	Third party	15/05/2011	06/11/2011	
P_AdOH	Level of tank R-5300	LT-4500	N-salt production (P_AdOH)	Manufacturer Specifications	1/year	Rhodia	21/07/2010	14/07/2011	
P_AdOH	Level of tank R-5310	LT-4509	N-salt production (P_AdOH)	Manufacturer Specifications	1/year	Rhodia	03/03/2011	23/02/2012	
P_AdOH	Refractometer	Lab equipment RFM-340	N-salt production (P_AdOH)	Manufacturer Specifications	1/week	Rhodia	09/02/2012 16/02/2012 23/02/2012 01/03/2012 08/03/2012 15/03/2012 22/03/2012	29/03/2012	
				Manufacturer Specifications	2/year	Third party	01/09/2011	23/02/2012	
HNO3_cons	Nitric acid mass flowmeter	FQ-2179	Nitric Cons	Manufacturer Specifications	2 years	Third party	29/08/2008	21/07/2010	
HNO3_cons	Fresh nitric acid conc analyzer	AI-2179	Nitric Cons	Manufacturer Specifications	2 years	Third party	29/08/2008	03/08/2010	
HNO_3_physical	Flowmeter of effluent to biological WWT	FQ-2973	Nitric Loss	Manufacturer Specifications	1/year	Rhodia	28/07/2010	21/07/2011	
HNO_3_physical	Flowmeter of effluent to neutralization	FQ-2974	Nitric Loss	Manufacturer Specifications	1/year	Rhodia	28/07/2010	21/07/2011	
HNO_3_physical	Waste gas flowmeter	FQ-3450	Nitric Loss	Manufacturer Specifications	1/year	Rhodia	08/12/2010	30/11/2011	
HNO_3_physical	Nitric analyzer on effluent to neutralization	AI-2974	Nitric Loss	Manufacturer Specifications	2/month	Rhodia	09/02/2012 23/02/2012 08/03/2012	22/03/2012	
HNO_3_physical	Nitric analyzer on effluent to neutralization	AI-2974B	For failure of AI-2974	Manufacturer Specifications	2/month	Rhodia	02/02/2012 16/02/2012 01/03/2012 15/03/2012	29/03/2012	
HNO_3_physical	NOx analyzer in the waste gas stream	AI-2195AB	Nitric Loss	Manufacturer Specifications	1/week	Rhodia	09/02/2012 16/02/2012 23/02/2012 01/03/2012 08/03/2012 15/03/2012 22/03/2012	29/03/2012	

Annex 1 – Table of Equipments/General Information

Related PDD parameter	Instrument Location/Description	Tag Number	Parameter in PDD	Reference	Frequency	Work Done by	Previous calibration dates	Last calibration date	Remarks
HNO3_cons	Level of nitric acid storage tank F-1769	LI -3350	Nitric Cons (backup)	Manufacturer Specifications	1/year	Rhodia	18/07/2011	08/03/2012	* Calibration was anticipated due to planned shutdown (end of campaign) at Nitric Acid plant
HNO3_cons	Flowmeter of fresh nitric acid to storage	FQ-3318	Nitric Cons (backup)	Manufacturer Specifications	1/year	Third party	07/07/2011	29/02/2012	* Calibration was anticipated due to planned shutdown (end of campaign) at Nitric Acid plant
Q_NG	Natural gas flowmeter	FQ-3408	Project emission	INMETRO - Brazil Standard Portaria no. 114 (16October1997)	2 years	Third party	19/03/2010	29/02/2012	
Q_Steam_p	40 bar steam flowmeter	FQ-3470	Baseline emission	Manufacturer Specifications	1/year	Rhodia	05/10/2010	28/09/2011	
Q_Steam_c	6,5 bar steam flowmeter	FQ-3409	Leakage	Manufacturer Specifications	1/year	Rhodia	05/01/2011	03/01/2012	
Q_GE	Stack effluent gas flowmeter	FQ-3490	Project emission	Manufacturer Specifications	1/year	Rhodia	08/10/2010 29/06/2011	30/09/2011	* It was done a new calibration in the period #49, for keeping the frequency stated before the corrective maintenance done on the period #47 (28/06 to 29/06/2011).
N_2O_GE	Stack N_2O analyzer (in-situ, laser diode)	AI-3490B	Project emission	Manufacturer Specifications	2/year	Rhodia	04/10/2011	28/03/2012	
N_2O_GE	Stack N_2O analyzer (extractive, infrared)	AI-3490G	Project emission (backup)	Manufacturer Specifications	1/week	Rhodia	09/02/2012 16/02/2012 23/02/2012 01/03/2012 08/03/2012 15/03/2012 22/03/2012	29/03/2012	
%_on-line	By-pass valve leak test	HV-3402	Project emission	PDD section D3	1/year	Third party	02/03/2011	15/02/2012	
Q_Power	Electricity meter	JI-3461	Leakage	ONS - Brazil Standard Submódulo 12.3 (07July2008)	2 years	Third party	16/09/2008	27/07/2010	
HNO_3_physical	Waste gas flowmeter	FIC-3401	For failure of FQ-3450	Manufacturer Specifications	1/year	Rhodia	18/10/2010	05/10/2011	
Q_NG	Natural gas flowmeter	FQ-3460	For failure of FQ-3408	INMETRO - Brazil Standard Portaria no. 114 (16October1997)	2 years	Third party	03/03/2010	Replaced on 06/02/2012 (calibration certificate dated 03/10/2011)	* The flowmeter maintanance was performed on 06/02/2012, when the flowmeter was replaced by an instrument calibrated on 03/10/2011. For this reason, 03/10/2011 was considered the calibration date.
Q_Steam_p	Boiler feed water flowmeter	FQ-3410	For failure of FQ-3470	Manufacturer Specifications	1/year	Rhodia	04/10/2010	27/09/2011	
P_AdOH	Level of tank RE-2422	LI-2422	Inventory variation	Manufacturer Specifications	1/year	Third party	10/09/2010	31/08/2011	
	Stack NO analyzer (extractive, infrared)	AI-3490A	NOx emission control	Manufacturer Specifications	1/week	Rhodia	09/02/2012 16/02/2012 23/02/2012 01/03/2012 08/03/2012 15/03/2012 22/03/2012	29/03/2012	* Calibration frequency was modified from monthly to 1/week as of November, 2010.
	Stack NO_2 analyzer (extractive, ultraviolet)	AI-3490F		Manufacturer Specifications	1/week	Rhodia	09/02/2012 16/02/2012 23/02/2012 01/03/2012 08/03/2012 15/03/2012 22/03/2012	29/03/2012	* Calibration frequency was modified from monthly to 1/week as of November, 2010.

* Source of data: Quality Management System and SAP and Excel file "Instrument List"
INMETRO - Instituto Nacional de Metrologia www.inmetro.gov.br
ONS - Operador Nacional do Sistema Elétrico www.ons.org.br

History of the document

Version	Date	Nature of revision
01	EB 54, Annex 34 28 May 2010	Initial adoption.
Decision Class: Regulatory **Document Type**: Guideline, Form **Business Function**: Issuance		