PROJECT DESIGN DOCUMENT FORM
FOR SMALL-SCALE CDM PROJECT ACTIVITIES (F-CDM-SSC-PDD)
Version 04.1

PROJECT DESIGN DOCUMENT (PDD)

Title of the project activity	**Flare Gas Recovery in Sarkhoon and Qeshm Gas Treating Company**
Version number of the PDD	01
Completion date of the PDD	12/10/12
Project participant(s)	• Sarkhoon & Qeshm Gas Treating Co. (SQGC) • Research Institute for Petroleum Industry (RIPI) • Mehr Renewable Energies Company. Ltd
Host Party(ies)	Iran
Sectoral scope(s) and selected methodology(ies)	- Scope (1): Energy industries or Scope (10): Fugitive emissions from fuels - New small scale methodology named "Flare Gas Recovery in Gas Treating Facilities"
Estimated amount of annual average GHG emission reductions	46,494 (tones of CO_2-e)

SECTION A. Description of project activity

A.1. Purpose and general description of project activity

>>

The objective of the project activity is to recover the excess amount of low pressure gases, which are produced in gas dehydration, sweetening and stabilization units of gas treating plant, currently being flared. The recovered gas will be pressurized and will be fed to the existing dehydration plant where it will be dehydrated to be ready to use natural gas, hereinafter called Sale Gas.

Sarkhoon & Qeshm Gas Treating Company (SQGC) operates two gas treating plants, Sarkhoon and Gavarzin. The capacity of Sarkhoon plant is 14.4 MMSCMD. Feed gas in treated to produce Sale Gas, condensate and LPG.

During the gas processing, some low pressure gases are produced in different units, which their pressure is lower than that of the product line. These low pressure gases are partially used as fuel gas in the refinery. The low pressure gases which are produced in SQGC are more than the required amount for plant energy supply and excess amounts are being burnt in the hot flares.

The project activity aims to collect the flare gas, pressurize it by the new installed compressors and route it to the dehydration unit as a feedstock. Consequently the recovered gas will be processed and will be sent to the product line as the Sale Gas (product).

The required technologies for project activity are including the K.O. Drums, Compressors, Inter-coolers, after coolers and pipelines and connection facilities to De-hydration unit.

The amount of recovered flare gas is the source of baseline emissions which will be reduced under project activity. The schematic flow diagrams for fuel gas system and flare gas sources in baseline scenario are shown in Figure (1). Also, the schematic flow diagram of project scenario is shown in Figure (2).

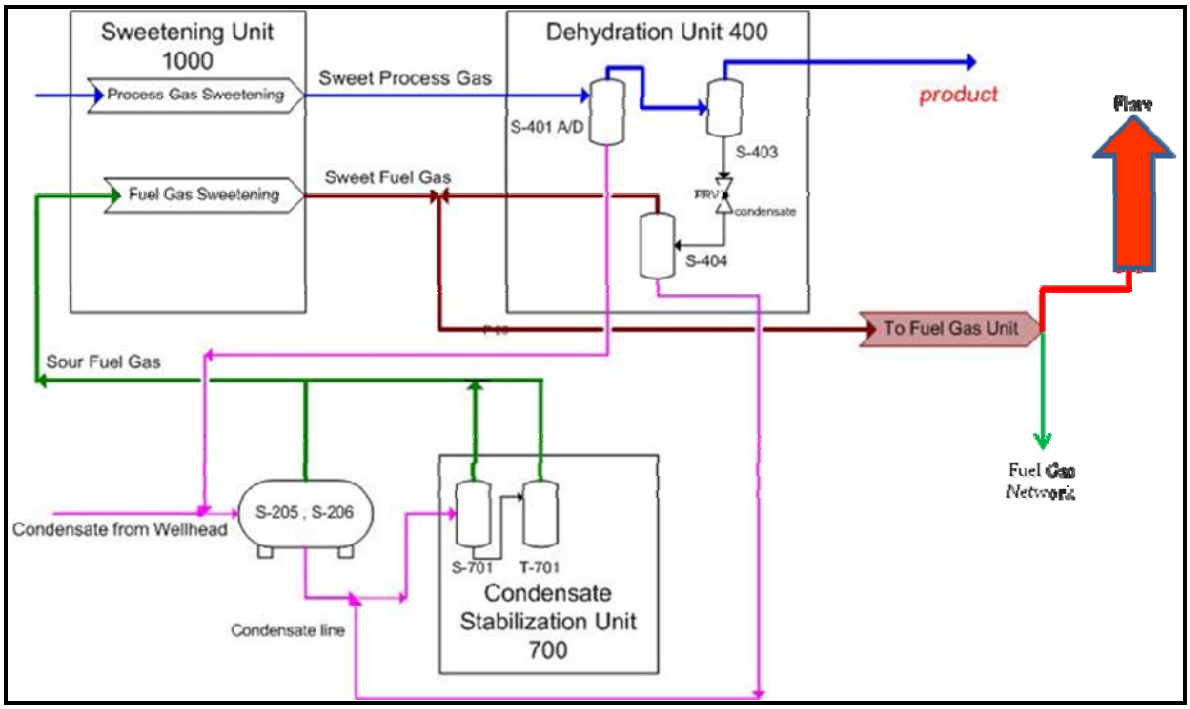

Figure1. Flow Diagram for Fuel Gas System (Low Pressure Gas) and Flare Gas Sources in Baseline

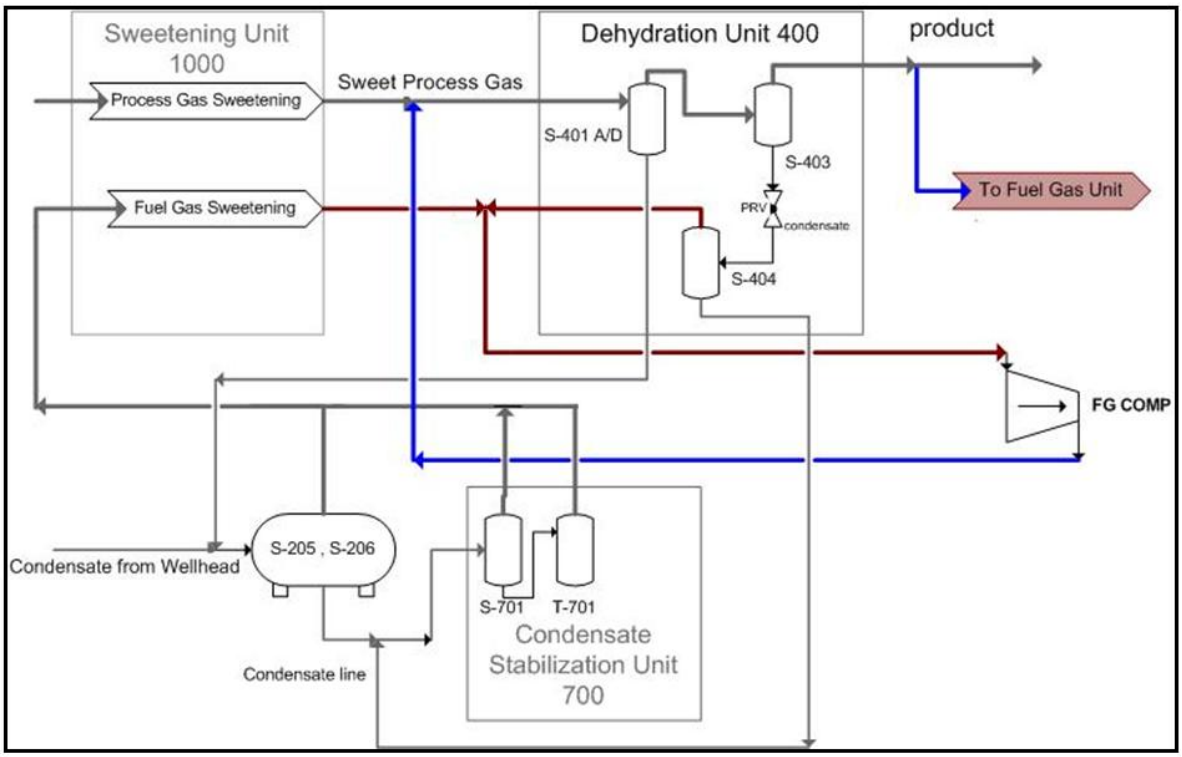

Figure2. The schematic flow diagram for Project Activity

A.2. Location of project activity

A.2.1. Host Party(ies)

>>

Iran

A.2.2. Region/State/Province etc.

>>

Hormozgan Province

A.2.3. City/Town/Community etc.

>>

Bandar Abbas/ Minab

A.2.4. Physical/ Geographical location

>>

The proposed CDM project activity is located inside the Sarkhoon and Qeshm Gas Treating Company. SQGC is located around 25 kms away from Bandar Abbas city in Hormozgan province, south of Iran. The location map of the Sarkhoon and Qeshm Gas Treating Company is as follows:

The Geographical coordinates of the project site are N 27˚ 20" 30' E 56˚ 25" 45'.

A.3. Technologies and/or measures

>>

During the gas processing in SQGC, low pressure gases are produced in different units. The pressure of this off-gas is lower than that to be injected to product line. According to the plant design, this off-gas should be used as fuel gas in the refinery to maintain the plant energy demand. The off-gas which is produced in SQGC is more than its required fuel gas and excess amount of off-gas should presently be burnt in the hot flares.

To prevent the flaring of the extra amount of off-gas, it has been decided to recover all off-gas and send it to the existing process units in associated with the process gas as feedstock. The required fuel gas for on-site consumption, then will be supplied from the refined gas (refinery gas or the product of SQGC).

The recovered off-gas stream should reach a specified pressure before introducing to the inlet of de-hydration unit. The project plans to install gas compressors package to increase the pressure of off-gas from 15 bar to 68 bar. Then recovered gas is introduced to the dehydration unit for stabilization of the dew point. After then it is supplied as a product to end-users through the existing product pipeline. The schematic flow diagram for project activity is shown in Figure (2) above.

A.4. Parties and project participants

Party involved (host) indicates a host Party	Private and/or public entity(ies) project participants (as applicable)	Indicate if the Party involved wishes to be considered as project participant (Yes/No)
Iran (host)	• Sarkhoon & Qeshm Gas Treating Co. (SQGC) • Research Institute for Petroleum Industry (RIPI) • Mehr Renewable Energies Company (MRE)	No

A.5. Public funding of project activity

>>

The project has not received any type of public funding or public financial help.

A.6. Debundling for project activity

>>

According to the provisions of Annex C of the Simplified Modalities and Procedures for CDM, this project is not a debundled component of a larger project activity since none of the project participants have registered or are in the process of registering or implementing any other project in the region around the SQGC (Sarkhoon and Qeshm Gas Treating Company).

SECTION B. Application of selected approved baseline and monitoring methodology

B.1. Reference of methodology

>>

Reference: Proposed new small scale methodology named "Flare Gas Recovery in Gas Treating Facilities"

B.2. Project activity eligibility

>>

According to the applicability criteria of the above proposed new small scale methodology;

This methodology comprises off- gas recovery in the existing gas treating facilities (gas plants) to be used as feed stock of the facility. Off- gas is characterized by lower pressure for which there is no useful application in the facility, however it may be used partially as fuel gas, and partially be flared or vented to atmosphere.

The project activity involves the recovery of low pressure off-gas which is used partially as fuel gas and partially be flared. The recovered gas recycles back to the existing process unit as feedstock.

Under the project activity the recovered off- gas, after the pre-treatment (compression), is fed to existing process unit in associated with the process gas. The refinery gas is transferred directly to the gas pipeline and partly consumed on-site to meet energy demands.

In the project activity the recovered off-gas is compressed and fed to the dehydration unit in associated with the process gas. For on-site energy requirements, a branch of the refinery gas pipeline is routed to the fuel gas unit.

There should not be any addition of fuel gas or refinery gas in the off- gas pipeline between the point of recovery and the point where it is fed to process unit.

There is no addition of refinery gas in the pipeline transporting the recovered off-gas between the compressor output (*i.e.* point of recovery) and the dehydration unit. Please refer to figure 2 in section A.1 of this document.

Off- gas flow and composition are measurable

The amount of off gas recovered by the project activity will be continuously measured by an installed flowmeter and the composition will also be analyzed using gas chromatography

Accordingly the new small scale methodology, Flare Gas Recovery in Gas Treating Facilities, is applicable for this project.

The project activity results in emission reduction of approximately 46,494 t CO_2-e annually, which is less than the threshold of 60,000 t CO_2-e/year applicable to project type and category.

B.3. Project boundary

>>

The physical, geographical site of the refinery where the off-gas is produced and transformed into useful product delineates the project boundary.

B.4. Establishment and description of baseline scenario

>>

The performance of the project activity and its associated emission reductions were evaluated with respect to the baseline scenario. The following possible alternative options have been reviewed:

Alternative 1: Continuation of the present scenario with both Fuel gas consumption for on-site energy requirements and flaring of the extra low pressure off-gas.

In absence of CDM project activity, SQGC would continue to utilize the off-gas for both fuel gas to meet the on-site energy demand and flaring of the excess amounts. This system is part of existing facility of SQGC, thus it does not entail any capital investment. Also there aren't any legal barriers for flaring of the off-gas in oil and gas facilities in Iran. Therefore this alternative is considered as a feasible baseline scenario.

Alternative 2: utilization of the extra amount of off-gas to produce the electrical power:

There are no statutory and technical barriers to utilize the extra amount of off-gas to produce electrical power in site. But it is not an appropriate alternative because of the economical reason. Since the electricity producing in site is more expensive than purchasing it from the grid, this alternative is excluded from further consideration. Also, SQGC current captive power plant capacity is suitable for providing enough electricity to SQGC domestic demand and therefore the extra power generation capacity is being for export to the grid, which is not the business of SQGC. Therefore this alternative may be excluded from further consideration.

Alternative 3: Implementation of off-gas Recovery System without CDM consideration:

This alternative faces a number of barriers which are detailed in section B.5. Thus, for SQGC, it is not possible to implement the project without CDM. Therefore this alternative may be excluded from further consideration.

Hence it has been concluded that in the absence of the project initiatives, SQGC would have continued its operation as depicted under alternative no. 1. Thus, the baseline is Continuation of the utilization of off-gas for both fuel gases to meet the on-site energy requirement and flaring off the extra amounts.

B.5. Demonstration of additionality

As described in section B.4 above, flaring of the off gas in oil and gas industries, is very common in the region and there is no regulation that prohibit the gas flaring in Iran's oil and gas industries.

Therefore, regardless of the environmental benefits in national/local level, the recovery of flare gas is decided based on the economics. Without considering the incomes from CDM, the project activity could not be implemented because of the following barrier;

Investment Barrier

It might be noted that the price of Natural Gas in domestic market is very cheap, while the flare gas recovery projects are capital intensive and requires significant investment.

Early 2008, SQGC started the feasibility study of the Flare Gas Recovery (FGR) project. The result of the study was revealed that the investment is not economically attractive, unless if incomes from CDM could be gained. Therefore, SQGC approved the FGR project condition to the CDM benefits. Additionally the company put significant non-monetary values on environmental benefits in local level and from national point of view.

Table 1 shows the data and result of feasibility study. As indicated in the table, IRR of the project activity is 5.2 % (less than the expected lending rate[1]) which means that the project activity is not economically attractive. Thus in the absence of CDM, project activity could not be implemented.

Table 1: Information for Investment Analysis

Description	Project Cost
Capital investment (Million Rial)	51,885
Operation & Maintenance Cost (Million Rial/yr)	3,632
Electricity Consumption (MWh)	7,008
Electricity Price (Rial/KWh)	275.9
Electricity Cost (Million Rial/yr)	1,934
Rate of Recovered Flare Gas (SCM/hr)	1868
Natural Gas Price (Rial/SCM)	598
Revenues from Sale of Recovered Gas (Million Rial/yr)	9,785
Financial Indicators without CDM	
Internal Rate of Return (IRR-%)	5.2
Financial Indicators with CDM	
CDM Cycle Cost (Million Rial/yr)	2,375
Project Annual CER	36,096
CER Unit Price (US$/Rial)	12US$/114,000 Rial
Net Annual CER Income (Million Rial/yr)	3,703
Internal Rate of Return (IRR-%)	11.4

[1] Based on Central Bank of Iran, The lending rate for industry is 12%.

Notes:

- The capital investment in the project activity includes all costs spent by SQGC for engineering, procurement, construction and commissioning. It was indicated 51,885M Rial in the FSR, but as the realized cost of 90,231M Rial is more conservative, therefore in investment analysis, the indicated cost in FSR is considered as the capital cost as a conservative approach.
- Electricity consumption of the FGR unit depends on the amount of recovered off-gas in the project scenario. For estimation of electricity cost and also ex-ante emission reduction, The FGR unit electricity demand, is extracted from data sheet of project equipments (Compressor Package).
- Natural gas price for FSR is based on the price of imported gas from Turkmenistan in 2006-2007 (598 Rial/ Cubic meters, IIES 2006 Hydrocarbon Balance). The domestic gas price for industry is 77% lower than the imported gas price; therefore the FSR is more conservative.
- Electricity price is based on total grid electricity cost (non-subsidized[2]) for industry which was provided through national grid. It was 275.9 rial/KWh in 2006-2007.
- The operation and maintenance cost of project, is considered about 7% of capital investment. The assumption is based on the experience of SQGC and also the general guidance by Bank-e-Sanat Va Madan on feasibility study of Oil and Gas Projects.
- Net Calorific Values for Fuel Gas (Off-gas), is adopted from SQGC laboratory test result.
- A rate of 12% is applied to IRR analysis. This rate is based on the Expected Rate of Return in Facilities; also it is in compliance with lending rate of Central Bank of Iran for Industrial sector.[3].
- Life time of project activity is 20 years which is relevant to the lifetime of compressor package.
- The residual value for new equipment at the end of the lifetime of the project activity is negligible.

To consider also the variations on critical assumptions, the sensitivity analysis is conducted. Guidance on the Assessment of Investment Analysis defines critical assumptions as those which constitute more than 20% of total project costs or total project revenue and reasonable variation has been defined as a range of +10% and - 10% (Paragraph 20 of the guideline on investment analysis, EB 62, Annex 5).

[2] The price of grid electricity which was supplied to industry (without subsidy) in 2006-2007(1385 Persian Calendar), were 275 Rial/KWh. Source: Energy Balance, 1385, Page 302.

[3] www.cbi.ir/page/????.aspx

A scrutiny of the project cost reveals that equipment cost account for more than 20% of the project cost, but for conservative reason, the total capital investment variation is applied in sensitivity analysis. Also revenue from sale of the recovered off-gas is only source on project revenue and shall be subject to variation. Also the Electricity tariff and therefore, operation cost is subjected to variation. Thus all variables of investment analysis have been subjected to sensitivity analysis.

Three factors have thus been identified as sensitive: Capital Investment, Operation cost and Natural gas tariff price. The impact of a "reasonable variation" in these three parameters on the IRR of the project, have been worked out and the results are presented in Table 2.

1) Sensitivity analysis I: Initial capital investment of the project scenario is 10% lower than expected (actual data reveals that this cost is 70% (90,231M Rial) [4] higher than FSR).
2) Sensitivity analysis II: Operation cost of the project is 10% lower than expected (with current electricity sale price (subsidized-263.6 Rial/KWh[5]) to industry, the electricity cost of the project is reduced maximum 4%).
3) Sensitivity analysis III: Natural Gas price is 20% higher than expected (Current Natural Gas tariff for 2010-2012 is constant at rate of 700 Rial/Cubic meters[6], therefore maximum variation in gas price is 17%).

Table 2: Sensitivity analysis

Description	Internal Rate of Return (IRR-%)
Base case	5.2
Sensitivity analysis I	7.5
Sensitivity analysis II	6.7
Sensitivity analysis III	10.2

As shown in the above table, IRR of the project is always lower than the benchmark, confirming the project activity without CDM benefit is not economically attractive. So the CDM incomes play a key role in the attractiveness of implementation of FGR project. With the confidence that the project activity is eligible for a CDM activity, SQGC, decided to implement the project activity.

[4] Contract with SHIMA FARMAND and TARHO-TABDIL for approval of basic design, procurement and construction.
[5] MOE Energy Balance, 2010, Page 184.

Additionally, the timeline of project implementation together with CDM implementation timeline as stated in following tables shows that the CDM potential has been assessed and considered.

Table 3: Timeline of the project implementation

Date	Action Taken	Remark
Aug. 2008	Feasibility Study	Feasibility Study was done by SQGC, included the CDM potential assessment.
Sep. 2008	Decision making by Managing Director	FGR project approved, considering the CDM incomes
Jan. 2010	Contract with Shima Farmand and Tarho-tabdil Consortium has made by IGEDC/SQGC Company.	Contract included confirmation of basic design, procurement and construction of FGR system.
May 2010	Detail design was approved and procurement started	Advance payment for procurement was paid.
May 2011	Civil works has started	
May 2012	Project equipments was procured	The project equipment carried out to Bandar-abbas port.
Oct. 2012	Equipment Installation	Machinery and equipments are under installation.

[6] http://mgd.nigc.ir/MGD2/_Documents/dir_2/_Download/tarefe89_09_28.pdf

Table 4: Timeline of the CDM cycle

Date	Action Taken	Remark
08/2008	CDM incomes considered in feasibility study following to the participation of SQGC HSE and Research division staffs in national CDM workshop on 28 January 2008, which was organized by NIOC.	CDM incomes played as a key decisive role in feasibility study and economical attractiveness
09/2008	Decision made to implement the project relying on CDM incomes.	CDM incomes was the condition for this decision making
10/2008	Request for proposal for development of the project under CDM (nominating CDM developer)	Request of Research Division of SQGC from RIPI(letter No. 9786-000-23g, dated 17 October 2008) to submitting consultancy proposal for development of flare gas recovery project under CDM
12/2008	The AM0037 ver. 1.1 was expired and new version is not applicable for SQGC project.	RIPI response that the approved methodology AM0037 ver. 1.1 was expired and its new version (ver. 2.1) is not applicable for flare gas recovery project in gas plans. Also, RIPI stated that they will submit their proposal after submitting request for clarification of AM0037 ver. 2.1 on its applicability for the project.
01/2010	Project Started	Contract signed with Subcontractors, Shima Farmand and Taro-Tabdil Co.
07/2010	Prior Consideration of the CDM	The prior consideration of the CDM has submitted to the DNA and Executive Board
11/2010	PIN submitted to the DNA	Project Idea Notes (PIN) has been submitted to DNA of host party and letter of No-objection has been issues.
04/2011	Request for validation proposal (Cost) from DOE	Mehr Renewable Energies Co. (MRE) has sent request for validation proposal to TUV NORD and also request clarification on applicability of AM0055 for SQGC project like that their under validation ADGAS[7] project.
04/2011	CDM Developer has been chosen	Research Institute for Petroleum Industry (RIPI) and Mehr Renewable Energies Co. (MRE) selected as CDM consultant.
10/2011	CDM Developer contract finalized	After a long discussion on terms of contract, it is finalized on 5th October 2011.
03/2012	Draft New SSC Methodology was prepared	A new SSC methodology was prepared based on project description.

[7] http://cdm.unfccc.int/Projects/Validation/DB/L5E0NG5DNZHVXRD2ZNNOWVW0OOPP5M/view.html

06/2012	Stakeholder meeting was organized.	A stakeholder meeting for consideration of the views of local stakeholders on project outcomes/benefits was organized on 27 June 2012 at project site.
07/2012	Prior Consideration of the CDM was renewed.	The progress of the project activities was reported to the EB and DNA and published in UNFCCC website 0n 01 July 2012.
07/2012	Draft PDD was submitted to SQGC.	SQGC submitted their comment on PDD for inclusion by CDM consultant.
08/2012	MOC was submitted to the SQGC for signatory.	MOC signed and circulated among project participants.
09/2012	PDD was finalized	

As shown in the above tables, SQGC has considered the incentives from CDM before the start of project activity and has taken continuing and real actions to secure CDM.

B.6. Emission reductions

B.6.1. Explanation of methodological choices

>>

The procedures to calculate project emissions, baseline emissions and emission reductions as per the procedures outlined in the proposed simplified methodology for the small scale project activity have been provided as below.

Estimation of Baseline Emissions:

As per the proposed simplified methodology for the small scale project activity the baseline emissions of the project activity are calculated as specified hereunder.

$$BE_{y} = BE_{FC,y} + BE_{EC,Grid,y} \quad (1)$$

Where:

BE_y = Baseline emissions during the year y (t CO_2-e/yr)

$BE_{FC,y}$ = Baseline emissions from flaring and fuel combustion in year *y* (t CO_2-e/yr)

$BE_{EC,Grid,y}$ = Baseline emissions from grid electricity consumption in year *y* (t CO_2-e/yr)

y = Project year

$$BE_{FC,y} = V_{OG,y} \times W_{C,y} \times 44/12 \quad (2)$$

Where:

$V_{OG,y}$ = Net amount of off-gas recovered in year y at the point that enters to the existing process facility (Sm^3/year).

$W_{C,B,y}$ = The carbon content of off- gas recovered in year y (Kg C/Sm^3)

Baseline emissions from consumption of grid electricity

Baseline emissions $BE_{EC,grid,y}$ due to the use of grid electricity for gas plant in the absence of project activity are calculated applying the latest approved version of the ***"Tool to calculate baseline, project and/or leakage emissions from electricity consumption"*** where the electricity consumption sources *k* in the tool corresponds to all sources of electricity consumption in baseline. All applicable sources of electricity consumption should be documented transparently in the CDM-PDD and in monitoring reports.

Capping of baseline emission

As an introduction of element of conservativeness, this category requires that baseline emissions should be capped irrespective of planned/ unplanned or actual increase in output of plant, change in operational parameters and practices, change in fuels type and quantity resulting in escalation of off-gas generation. The historical three years average of off-gas sent to the flares and/or used as fuel gas shall be the cap for the total annual amount of off-gas during the crediting period. The annual monitored $V_{OG,y}$ is compared with this cap and the minimum one is used to calculate the baseline emission in equation (2) above.

The following table summarizes the off-gas generated from the various processes during the last three years:

	Quantity (MMSCM)		
year	Off-gas consumption as fuel gas	Off-gas flaring	Total off-gas generation
21 March 2009-20 March 2010	31.5	18.9	50.4
21 March 2010-20 March 2011	27.7	22.0	49.7
21 March 2011-20 March 2012	35.5	23.2	58.7
Average	31.6	21.4	**53.0***

*this value is the cap for baseline emission, Source: Plant data

Estimation of project activity emissions:

As per the proposed simplified methodology project activity direct emission is attributed to any increase in emissions within the project boundary due to consumption of refinery gas (refinery product) as fossil fuels for the total on-site consumption and use of grid electricity for the project activity demands (recovery, transportation, and compression of the recovered off-gas).

Emission due to use of electricity:

The project activity involves the use of electricity to operate the compressor. Project emissions due to electricity consumption are hence computed as per guidelines of the ***"Tool to calculate baseline, project and/or leakage emissions from electricity consumption",*** version 01.

The electricity required for operation of the compressor will be supplied from the national grid of Iran which is connected to the captive power plant of SQGC. Since the total amount of required electricity is supplied from the grid, the case C-I of the above tool is selected for the project activity emission calculations.

Scenario C: Electricity consumption from the grid and (a) fossil fuel fired captive power plant(s).

Case C.I: Grid electricity. The implementation of the project activity only affects the quantity of electricity that is supplied from the grid and not the operation of the captive power plant.

Where case C.I has been identified, the guidance for scenario A of the above mentioned tool should be applied (option A1 or option A2).

$$PE_{EC,y} = \sum_{j} EC_{PJ,j,y} \times EF_{EL,j,y} \times (1 + TDL_{j,y}) \quad \textbf{(3)}$$

Where:

$PE_{EC,y}$ = Project emissions from electricity consumption in year *y* (t CO_2/yr)

$EC_{PJ,j,y}$ = Quantity of electricity consumed by the project electricity consumption source *j* in year *y* (MWh/yr)

$EF_{EL,j,y}$ = Emission factor for electricity generation for source *j* in year *y* (tCO_2/MWh)

$TDL_{j,y}$ = Average technical transmission and distribution losses for providing electricity to source *j* in year *y*

Emission due to consumption of fuel gas:

The project activity also involves the combustion of fuel gas for the total on-site consumption. Project emissions due to fuel gas consumption are hence computed as per guidelines of the ***"Tool to calculate project or leakage CO_2 emissions from fossil fuel combustion"*** /Version 02

CO_2 emissions from fossil fuel combustion in process j are calculated based on the quantity of fuels combusted and the CO_2 emission coefficient of those fuels, as follows:

$$PE_{FC,y} = V_{P,y} \times COEF_{P,y} \quad \textbf{(4)}$$

Where:

$PE_{FC,y}$ = Are the CO_2 emissions from fossil fuel combustion in process j during the year y (tCO_2/yr);

$V_{P,y}$ = Is the quantity of fuel type i combusted in process j during the year y (mass or volume unit/yr);

$COEF_{P,y}$ = Is the CO_2 emission coefficient of fuel type i in year y (t CO_2/mass or volume unit)

The CO_2 emission coefficient $COEF_{P,y}$ is calculated using Option A of above mentioned tool:

Option A: The CO_2 emission coefficient $COEF_{P,y}$ is calculated based on the chemical composition of the fossil fuel, using the following approach:

$$COEF_{P,y} = w_{C,P,y} \times \rho_{P,y} \times 44/12 \quad \textbf{(5)}$$

Where:

$COEF_{P,y}$	=	Is the CO_2 emission coefficient of fuel type i in year y (t CO_2/mass or volume unit)
$w_{C,P,y}$	=	Is the weighted average mass fraction of carbon in fuel in year y (Kg C/mass unit of the fuel);
$\rho_{P,y}$	=	Is the weighted average density of fuel in year y (mass unit/volume unit of the fuel)

Capping of project activity emissions

The historical values of the last three years of consumed on-site energy in average (which is produced by fuel gas combustion) shall be the cap for the amount of on-site energy demand during the crediting period. The annual monitored value of $V_{p,y}$ is multiplied by its heating value and the result is compared with this cap. The maximum one is used to calculate the $V_{p,y}$ which is used in equation (4).

- **Note:** to simplify the monitoring stage, in case the required on-site energy (which is calculated in project activity design stage) is greater than the historical value of consumed on-site energy in average, the design value of V_p could be used as cap for project activity. In this case the annual monitored value of $V_{p,y}$ is compared with this cap and the maximum one is used in equation (4). This is conservative.

Considering the above note, the following table shows that the design value of required on-site energy demand (3.66e11 Kcal/year) is greater than the historical value of average on-site energy consumption (3.29e11 Kcal/year). So, the design value for on-site consumption (V_p [Sm^3/year]) is selected as the cap for the project activity emissions. Hence the monitored $V_{P,y}$ is compared with this cap (44.45 $MMsm^3$/year) and the bigger one is used in equation (4) to calculate the project activity emission. Also, this value is used to calculate the project activity emission in the clarification stage of the project.

Historical Data (Average)			Project Activity Design Data			Selected Cap
Fuel Gas Consumption (Sm^3/year)	Net Heating Value (Kcal/Sm^3)	Required Energy (Kcal/year)	Fuel Gas Consumption (Sm^3/year)	Net Heating Value (Kcal/Sm^3)	Required Energy (Kcal/year)	The design value (kcal/year)
31,600,000	10441.327	3.29e11	44,450,000	8242.15	3.66e11	3.66e11

Source: Plant data and design documents of the project

Estimation of leakage emissions:

As per proposed methodology no leakage emissions are considered for the project activity.

Estimation of Emissions Reductions

$$ER_y = BE_y - PE_y \quad (6)$$

Where:

ER_y = Emissions Reductions for the year y due to the project activity (t CO_2-e/year)

B.6.2. Data and parameters fixed ex-ante

Data / Parameter:	$V_{OG,y}$
Data unit:	Sm^3/year
Description:	Net amount of off-gas recovered at the point that off-gas enters the pipeline for transport to the flare/FG consumption
Source of data used:	historical data for the baseline scenario
Value applied:	53,000,000
Justification of the choice of data or description of measurement methods and procedures actually applied :	This data has been used to estimate the baseline emissions. Actual baseline emissions will be determined ex-post based on monitored values of off-gas and comparing it with the cap.
Any comment:	This value is used as minimum cap to calculate the baseline emissions. During

	the crediting period, the monitored $V_{OG,y}$ is compared with this value and the minimum one is used to calculate the baseline emissions in equation (2).

Data / Parameter:	**$V_{P,y}$**
Data unit:	Sm^3/year
Description:	Is the quantity of refinery gas (product) combusted as fuel for on-site requirement during the year y
Source of data used:	The data extracted from detail design documents of the FGR project
Value applied:	44,450,000
Justification of the choice of data or description of measurement methods and procedures actually applied :	This value is calculated, evaluated and justified during the design stage of the project. Also this value is used as the maximum cap for project activity emission.
Any comment:	This value is used only in clarification stage. During the crediting period of the project, $V_{P,y}$ shall be monitored regularly and compared with this value as cap. The maximum one is used in equation (4) to calculate the project activity emissions.

Data / Parameter:	**$EF_{EL,j,y}$**
Data unit:	t CO_2-e/MWh
Description:	Emission factor for the National Electricity Grid
Source of data used:	As per the guidance of "Tool to calculate project emissions from electricity consumption"/Version 01, Considering scenario C, case C-I
Value applied:	0.6396
Justification of the choice of data or description of measurement methods and procedures actually applied :	The combined margin emission factor of Iranian national electricity grid is 0.6396 as per the guidance of "Tool to calculate project emissions from electricity consumption"/Version 01. This parameter will be fixed ex-ante for the entire crediting period.

Any comment:	This value will be fixed for the entire crediting period following a conservative approach in line with the guidance of the "Tool to calculate project emissions from electricity consumption"/Version 01.

Data / Parameter:	**$TDL_{j,y}$**
Data unit:	NA
Description:	Average technical transmission and distribution losses in the grid in year *y* for the voltage level at which electricity is obtained from the grid at the project site.
Source of data used:	As per the guidance of "Tool to calculate project emissions from electricity consumption"/Version 01,
Value applied:	20%
Justification of the choice of data or description of measurement methods and procedures actually applied :	As per the guidance of "Tool to calculate project emissions from electricity consumption"/Version 01. This parameter will be fixed ex-ante for the entire crediting period.
Any comment:	This value will be fixed for the entire crediting period following a conservative approach in line with the guidance of the "Tool to calculate project emissions from electricity consumption"/Version 01.

B.6.3. Ex-ante calculation of emission reductions

>>

Baseline emission calculation:

$BE_y = BE_{FC,y} + BE_{EC,Grid,y}$

$BE_{FC,y} = V_{OG,y} \times W_{C,B,y} \times 44/12$

$W_{C,B,y}$=0.700 Kg Carbon/Sm^3 (Considering the 3 year historical off-gas analysis data showing carbon weight content of 75.1% and specific gravity of 0.77)

$BE_{FC,y}$= 53,000,000 (Sm^3/year) * 0.700 (Kg Carbon/Sm^3) *1/1000 ([ton/Kg] Carbon)*44/12

$BE_{FC,y}$ =136,033 (t CO_2-e/year)

$$BE_{EC,grid,y} = \sum_k EC_{BL,k,y} \times EF_{EL,k,y} \times (1 + TDL_{k,y})$$

In SQGC, the grid electricity has not been used for last three years. So:

$BE_{EC,Grid,y}$=0

$BE_y = BE_{FC,y} + BE_{EC,Grid,y}$ = 136,033 + 0 (t CO_2-e/year)

BE_y=136,033 t CO_2-e/year

Project activity emission calculation:

PE_y= $PE_{FC,y} + PE_{EC,y}$

$PE_{FC,y} = V_{P,y} * COEF_{P,y}$

$$COEF_{P,y} = w_{C,P,y} \times \rho_{P,y} \times 44/12$$

$w_{C,P,y} \times \rho_{P,y}$ = 0.521 kgCarbon/Sm^3 (Considering the 3 year historical refinery gas analysis data showing carbon weight content of 68.75% and specific gravity of 0.626)

$COEF_{P,y}$= 0.521 (kg Carbon/Sm^3) *1/1000 ([ton/kg] Carbon)*44/12

$COEF_{P,y}$ =0.00191 (t CO_2-e/Sm^3)

$PE_{FC,y}$= 44,450,000 (Sm^3/year) *0. 00191 (t CO_2-e/Sm^3)

$PE_{FC,y}$= 84,900 (t CO_2-e/year)

$$PE_{EC,y} = \sum_j EC_{PJ,j,y} \times EF_{EL,j,y} \times (1 + TDL_{j,y})$$

J1=Compressor package power rating (supply by grid electricity) =690 KW

J2=Consumption of grid electricity by SQGC consumers which are non-related to the project activity=0 KW

Total grid electricity consumption rate=690 KW

EC= 690*24*365/1000=6,044.4 MWh/year

Considering scenario C, case C-I: EF = 0.6396 t CO_2/MWh

$TDL_{j,y}$ = 0.2

$PE_{EC,y}$= 6,044.4 (MWh/year) * 0.6396 (t CO_2/MWh) * 1.2 = 4,639 t CO_2-e/year

PE_y = 84,900+4,639

PE_y = 89,539 t CO_2-e/year

$ER_y = BE_y - PE_y$ = 136033 – 89539

ER_y= 46494 t CO_2-e/year

B.6.4. Summary of ex-ante estimates of emission reductions

Year	baseline emissions (tCO_2-e)	project activity emissions (tCO_2-e)	leakage (tCO_2-e)	emission reduction (tCO_2-e)
1st year	136,033	89,539	0	46,494
2nd year	136,033	89,539	0	46,494
3rd year	136,033	89,539	0	46,494
4th year	136,033	89,539	0	46,494
5th year	136,033	89,539	0	46,494
6th year	136,033	89,539	0	46,494
7th year	136,033	89,539	0	46,494
8th year	136,033	89,539	0	46,494
9th year	136,033	89,539	0	46,494
10th year	136,033	89,539	0	46,494
Total (tCO_2-e)	1,360,330	895,390	0	464,940
Total number of crediting years	10			
Annual average over the crediting period	136,033	89,539	0	46,494

B.7. Monitoring plan

B.7.1. Data and parameters to be monitored

Data / parameter:	$V_{OG,y}$
Data unit:	Sm^3/year
Description:	Net amount of off-gas recovered in year y at the point that enters to the existing process facility.
Source of data:	Measurements with a flow meter
Measurement procedures (if any):	Data should be measured using accurate and calibrated flow meters. Measurements should be taken at the point that the recovered off-gas enters to the existing process facility.
Monitoring frequency:	Continuous
QA/QC procedures:	
Any comment:	Meters with capability of online conversion to standard condition. This value is compared with the minimum cap of baseline (53 $MMSm^3$/year) and the smaller one is selected to use in equation (2) to calculate the emission of baseline scenario.

Data / parameter:	$W_{C,B,y}$
Data unit:	Kg C/Sm^3
Description:	Average carbon content of off-gas in year *y*
Source of data:	Measurement of the chemical analysis (e.g., gas chromatography)
Measurement procedures (if any):	This value is measured using the carbon weight content and specific gravity supplied from off-gas chromatography
Monitoring frequency:	monthly
QA/QC procedures:	The measurement is done by SQGC laboratory (fuel provider) which they have ISO certification. Therefore, they follow the QA/QC procedure based of their regulation.
Any comment:	

Data / parameter:	$EC_{BL,k,y}$
Data unit:	MWh/year
Description:	Quantity of electricity consumed by the baseline electricity consumption source *k* in year *y*
Source of data:	Plant records
Measurement procedures (if any):	None
Monitoring frequency:	Continuous
QA/QC procedures:	
Any comment:	The total value of baseline electricity consumption can be monitored by a unique instrument which is installed in appropriate place.

Data / parameter:	$V_{P,y}$
Data unit:	Sm^3/year
Description:	The volume of refinery gas which is routed to fuel gas unit for on-site consumption
Source of data:	Measurements with a flow meter
Measurement procedures (if any):	Data should be measured using accurate and calibrated flow meters. Measurements should be taken at the point which is close as close to the product (refinery gas) pipeline.
Monitoring frequency:	Continuous
QA/QC procedures:	
Any comment:	meters with capability of online conversion to standard condition This value is compared with the maximum cap of project activity (44.45 $MMSm^3$/year) and the bigger one is selected to use in equation (4) to calculate the emission of project activity.

Data / parameter:	$W_{C,P,y} \times \rho_{P,y}$
Data unit:	Kg C/Sm^3
Description:	Average carbon content of refinery gas in year *y*
Source of data:	Measurement of the chemical analysis (e.g., gas chromatography)
Measurement procedures (if any):	This value is measured using the carbon weight content and specific gravity supplied from refinery gas chromatography
Monitoring frequency:	monthly
QA/QC procedures:	The measurement is done by SQGC laboratory which they have ISO certification. Therefore, they follow the QA/QC procedure based of their regulation.
Any comment:	-

Data / parameter:	$EC_{Pj,i,y}$
Data unit:	MWh/year
Description:	Quantity of electricity consumed by the project electricity consumption source *j* in year *y*
Source of data:	Plant records
Measurement procedures (if any):	None
Monitoring frequency:	Continuous
QA/QC procedures:	
Any comment:	The total value of project electricity consumption can be monitored by a unique instrument which is installed in appropriate place.

B.7.2. Sampling plan

>>

There are no any parameters which need to sampling. Based on the final methodology, if some parameters need sampling, the monitoring plan will be adjusted based on standards for sampling.

B.7.3. Other elements of monitoring plan

>>

In order to ensure the successful operation of the project and the creditability and verifiability of the CERs achieved, the project will have a well-defined management and operational system as shown in below figure 3. The monitoring plan and its institutional arrangement have developed in accordance with SQGC ISO 9001:2008 rules and regulations.

Project Proponent will implement to monitor the emission reductions generated by the project activity. Project Proponent will form an operational team, which will be responsible for the monitoring of all the required data. This team will be composed by the project manager who is the SQGC Deputy for Engineering and Development, operation department managed by the Operation Manager of SQGC, and maintenance department managed by Maintenance Manager of SQGC. Company has been ISO 9001 certified, on which all the project quality

management activity will be based. Figure 3 outlines the operational and management structure for monitoring of the project.

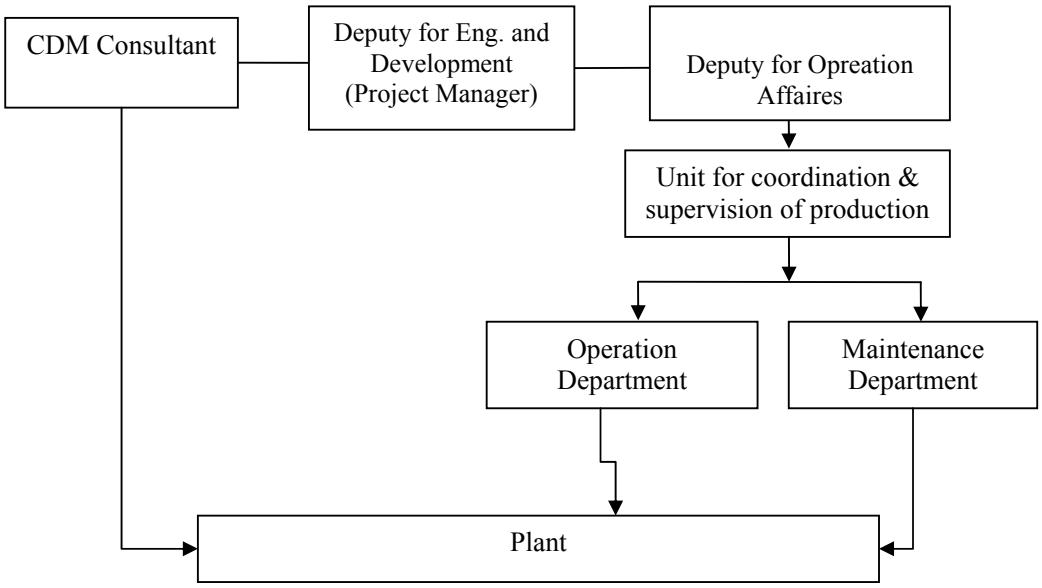

Figure 3: Operational and management structure for monitoring the project activity

Responsibility of operation department:

SQGC has been operating the plant since the commissioning of the plant for number of years and has sufficient and well experienced staff to operate. Eventually the technology provider will provide an on-site training course for operation of the monitoring equipments according to the operating manuals of the monitoring equipments.

Operation department,

1. Monitors continuously and records every two hours (aggregated daily) the different parameters mentioned in section B.7.1 above. Hence the monitoring of the relevant data of FGR unit is done automatically by new logging system and recorded onto the electronic media.
2. Records and archives data using paperwork and computer software. The computerized records will serve as back-up purpose and archived at Project site. All the data will be kept at least for 2 years after the end of crediting period.
3. Cross-checks the monitored data of recovered off-gas ($V_{OG,y}$) against off-gas production records of the plant and also check with cap.

4. Elaborates an estimate of emission reduction in an Emission Reduction Monitoring Report annually, based on the electronic data of Measuring System.
5. Ensures that operators are appropriately trained and assigned for monitoring/checking the different parameters/meters with courses and an instruction manual.
6. Reviews the instruction manual for its effectiveness and improvement. This manual will be made available during verification.

Operation manager will be responsible for the credibility and accuracy of the monitored data. In case deviation in the monitoring data is found, operation manager will study the operating parameters to identify the reason for the deviation and take remedial measures. If there are no changes in the operating parameters, the monitoring system will be examined. Once the fault is identified, the operation manager will introduce a correction to the fault. The operation manager will report such irregular event to project manager.

Responsibility of maintenance department:

All monitoring instruments will be maintained, inspected and calibrated based on the manufacturers' requirement and SQGC internal procedures, supported by an on-site training course for maintenance of the monitoring equipment by technology provider.

Maintenance department,

1. Ensures that all meters installed at the plant are calibrated according to the company procedures and manufacturer's requirements.
2. Elaborates the Calibration Report annually. The Calibration Report is composed listing all CDM-related instruments, their details, calibration status and expected error.

Responsibility of project manager:

Project manager has the entire responsibility of the CDM project and monitoring plan. SQGC's Deputy for Engineering and Development will be the project manager, and will provide the annual monitoring report.

1. Manages and supervises all monitoring activities under the project.
2. Review and approve the Emission Reduction Monitoring Report with all its attachments that will be verified by the DOE.
3. Subjects the Calibration Report Status to internal audit and provides as an attachment in the annual Emission Reduction Monitoring Report, for verification.

	Tasks description	Operator	Operation Manager	Maintenance Manager	Project Manager	CDM Consultant
Monitoring activity						
1	Recording of monitored data	✓				
Quality Assurance & Quality Control						
2	Verification of data monitored (consistency and completeness)		✓			
3	Ensuring adequate training of staff		✓			
4	Ensuring adequate maintenance			✓		
	Ensuring calibration of monitoring instruments			✓		
5	Data archiving: ensuring adequate storage of data monitored (integrity and backup): 2 years after the end of the crediting period		✓			
6.	Identification of non-conformance and corrective/preventive actions and monitoring plan improvement		✓			
7	Emergency procedures		✓			
8	External audit					✓
Calculation of GHG emission reductions and reporting						
9	Processing of data and calculation of emission reductions				✓	
10	Monitoring report: management review of monitoring report (internal audit)				✓	
11	External audit of monitoring report					✓

SECTION C. Duration and crediting period

C.1. Duration of project activity

C.1.1. Start date of project activity

>>

04/01/ 2010. This date is determined based on the date of contract with procurement and construction contractor.

C.1.2. Expected operational lifetime of project activity

>>

20 Years, 0 months.

C.2. Crediting period of project activity

C.2.1. Type of crediting period

>>

The project activity will make use of fixed crediting period.

C.2.2. Start date of crediting period

>>

01.06.2013 or the date of registration, whichever later.

C.2.3. Length of crediting period

>>

10 Years, 0 months.

SECTION D. Environmental impacts

D.1. Analysis of environmental impacts

>>

EIA is not required based on local regulation and requirements of Department of Environment for renovation, modification and process optimization of existing refineries.[8] However, the SQGC, in which the flare gas recovery project is occurring, has an approved EIA for whole plant.

In actual condition, the project activity will help to improve local air quality and will improve environmental condition as well as mitigate climate change. Also CO, NOx and PMs Emission will be decreased considerably by this project activity.

It is expected that there would not be negative environmental affect with the project activity.

Environmental impacts of air quality, water quality, noise and solid waste of the proposed CDM project are explained as below:

- Air quality:

  By this project, through the installing flare gas recovery package and preventing excess fuel gas burning in the flare, emission of NO_X and Co will be reduced by 44 ton and 88 ton per annum, respectively. Therefore the project may help improve the air quality at the project site. There are no any other additional air pollutants as result of project activity, because just electricity will be used as a fuel in FGR package.

- Water quality:

  There is no any water consumption for the implementation and/or operation of the FGR package. Therefore the project activity has no impact on the water environment.

- Noise:

  No additional noise will occur compared with the existing process as FGR facility for this project is installed inside the plant as an additional facility, and there is no significant impact to the nearby communities by low noise equipment and equipment installed far out of the communities.

- Solid and liquid waste:

  The project activity dose not used any type of solid materials. Also, small part of oils is used as lubricant in compressor cooling system. Therefore, there is not produced any solid waste through the project implementation. Also, the residue lubricant will be collected and treated based on HSE regulation of the plant.

[8] Environmental Regulation and Standards, Section I, Article 2, Page 32, Department of the Environment, August 2002

SECTION E. Local stakeholder consultation
E.1. Solicitation of comments from local stakeholders
>>
According to Iran's environmental law in force, the project activities in SQGC do not require an environmental impact assessment. As the project only involves installing flare gas recovery system in an existing facility, no stakeholders were significantly affected. In fact, the main stakeholder of the project is SQGC. However, in an effort to public consultation and to build a culture of social and environmental responsibility, the company has arranged a stakeholder's meeting on 27 June 2012 and a survey of stakeholders' opinion through distributed questionnaires. For appropriate engaging of the stakeholders, SQGC published a call for stakeholder meeting at local newspaper[9] and also sent invitation letters to relevant stakeholders.

In general, the project presentation in the meeting and the survey established the extent of:

1. The awareness of the project (concerns)
2. The understanding of the project purpose
3. Suggestions of environmental protection measures
4. Environmental impact of the project
5. Economical impact of the project
6. Impact on environmental community by the CDM
7. Impact on the socio-economic condition of local community by the CDM

The participants was most influenced parties by the project activities, including SQGC staff and workers, especially from operation unit and safety, Governor, Municipality, City and neighbourhoods villages' Council and, environment department of nearby city (Bandar-abbas and Minab), and the Department of Environment of Iran, rolling as DNA of CDM projects.

The Iranian Designated National Authority (DNA) for the CDM requires the compulsory invitation of selected stakeholders to comment the PDD, which is sent to validation in order to provide the letter of approval. DNA invites the comments from local stakeholders when validation is started.

The name of the organizations which the local stakeholders are invited by DNA, are as below:

- Department of Environment
- Ministry of Road and Urban Development
- Ministry of Petroleum
- Ministry of Energy
- Ministry of Trade, Industries and Mines
- Ministry of Jihad Agriculture
- Meteorological Organization
- Ministry of Economic Affairs and Finance

[9] Call for stakeholder meeting advertisement, Sobh-e-sahel Newspaper, Monday, 25, June 2012.

- Ministry of Defence
- Ministry of Information and Communications Technology
- Ministry of Health and Medical Education
- Ministry of Foreign Affairs
- Ministry of Interior (Municipalities and Rural Management Organization)
- Ministry of Science, Research and Technology
- President Deputy Strategic Planning and Control

E.2. Summary of comments received

>>

All of the stakeholders are in favour of the Project activity considering its environmental and the socio-economic effects. Nonetheless, all effects on the local environment are considered to be positive as the combustion of excess fuel gas in the flare will be prevented. There were no adverse comments in regards to the Project activity. Also, stakeholders commented that during project implementation, SQGC utilise the maximum local manpower in the project and spend more than 3% [10]of the CDM revenues in social development of the project neighbourhood areas.

E.3. Report on consideration of comments received

>>

As stated above, there were no negative comments from local stakeholders in regards to the Project activity. Also, SQGC promised that utilise from local companies and manpower in project implementation.

SECTION F. Approval and authorization

>>

Project Idea Note (PIN) was submitted to the DNA of Host Country and Letter of No-objection was issued on 10 December 2010 (Letter No. 8934126), but PDD did not yet submit to DNA of Islamic Republic of Iran. The PDD will be submitted to approval of DNA, when the validation process is started.

- - - - -

[10] Based on National Rules of Procedure for CDM, Project participants have to spend 3% of CDM revenues for sustainable development in project site under supervision of DNA.

Appendix 1: Contact information of project participants

Organization	Sarkhoon and Qeshm Gas Treating Company (SQGC)
Street/P.O. Box	Km 25 Bandar Abbas-Minab road
Building	Administrative Building
City	Bandar Abbas
State/Region	Hormozgan Province
Postcode	79159-99479
Country	Iran
Telephone	+98 (761) 2192100-3
Fax	+98 (761) 2192104
E-mail	info@nigc-sqgc.ir
Website	www.nigc-sqgc.ir
Contact person	Ahmad Zamani
Title	Managing Director
Salutation	Mister
Last name	Zamani
Middle name	----------
First name	Ahmad
Department	Management Department
Mobile	
Direct fax	+98 (761) 666 9922
Direct tel.	+98 (761) 666 9923
Personal e-mail	Zamani@Nigc-sqgc.ir

Organization	Research Institute of Petroleum Industry (RIPI)
Street/P.O. Box	West Blvd., Near Azadi Sports Complex
Building	RIPI Building
City	Tehran
State/Region	Tehran
Postcode	1485733111
Country	Iran
Telephone	+98 (21) 44739790
Fax	+98 (21) 44739700
E-mail	info@ripi.ir
Website	www.RIPI.ir
Contact person	Vahid Haddadi-Asl
Title	President
Salutation	Mister
Last name	Haddadi-Asl
Middle name	----------
First name	Vahid
Department	Management Department
Mobile	
Direct fax	+98 (21) 44739779
Direct tel.	+98 (21) 44739540/60
Personal e-mail	haddadi@ripi.ir

Organization	Mehr Renewable Energies Co. Ltd.
Street/P.O. Box	24m Ave, Farhang Sq., Sa'adat Abad
Building	No. 4, Unit 11
City	Tehran
State/Region	Tehran
Postcode	1998699134
Country	Iran
Telephone	+98 21 22136142
Fax	+98 21 22136271
E-mail	info@mehrenergy.com
Website	www.mehrenergy.com
Contact person	Adel Partovi
Title	Managing Director
Salutation	Mister
Last name	Partovi
Middle name	----------
First name	Adel
Department	
Mobile	+98 912 333 6871
Direct fax	+98 21 8858 4125
Direct tel.	+98 21 8858 4126
Personal e-mail	partovi@mehrenergy.com

Appendix 2: Affirmation regarding public funding

Project financing will not involve public funding from any Annex I countries.

Appendix 3: Applicability of selected methodology

It was described in section B.2.

Appendix 4: Further background information on ex ante calculation of emission reductions

It will be attached as spread sheet to the PDD.

Appendix 5: Further background information on monitoring plan

Not applicable. It was describe in section B.7.

Appendix 6: Summary of post registration changes

Not applicable.

- - - - -

History of the document

Version	Date	Nature of revision
04.1	11 April 2012	Editorial revision to change history box by adding EB meeting and annex numbers in the Date column.
04.0	EB 66 13 March 2012	Revision required to ensure consistency with the "Guidelines for completing the project design document form for small-scale CDM project activities" (EB 66, Annex 9).
03	EB 28, Annex 34 15 December 2006	• The Board agreed to revise the CDM project design document for small-scale activities (CDM-SSC-PDD), taking into account CDM-PDD and CDM-NM.
02	EB 20, Annex 14 08 July 2005	• The Board agreed to revise the CDM SSC PDD to reflect guidance and clarifications provided by the Board since version 01 of this document. • As a consequence, the guidelines for completing CDM SSC PDD have been revised accordingly to version 2. The latest version can be found at <http://cdm.unfccc.int/Reference/Documents>.
01	EB 07, Annex 05 21 January 2003	Initial adoption.
Decision Class: Regulatory **Document Type:** Form **Business Function:** Registration		