PROGRAMME DESIGN DOCUMENT FORM FOR CDM PROGRAMMES OF ACTIVITIES (F-CDM-PoA-DD)
Version 02.0

PROGRAMME OF ACTIVITIES DESIGN DOCUMENT (PoA-DD)

PART I. Programme of activities (PoA)

SECTION A. General description of PoA

A.1. Title of the PoA

>>
ONE Wind Program of Activity, Morocco
Version: 5.0
Date: 02/12/2012

A.2. Purpose and general description of the PoA

>>
(a) Policy/measure or stated goal that the PoA seeks to promote

The Kingdom of Morocco is a country located in North Africa. It has a population of about 36 million and an area of 710,850 km[1]. Morocco is part of the Maghreb region that includes Tunisia, Algeria, Mauritania and Libya, with which it shares cultural, historical and linguistic ties. While sharing the North African coast with some of the continent's largest oil and gas producers, Morocco is left to import 95%[2] of its energy needs due to limited resources of its own. The most recent CIA database indicates that more than 95%[3] of the country's electricity production is based on fossil fuel making the country highly susceptible to the vagaries of fluctuating oil prices.

The Ministry of Energy, Mines, Water and Environment announced the country's intention to increase the share of renewable energy from 4% to 10% by 2012[4]. A public institution, Agence Nationale pour le Développement des Energies Renouvelables et de l'Efficacité Energétique (ADEREE), regulated by Law 16/09 on RE was established with the primary objective to "support the implementation of the national policy in terms of renewable energy and energy efficiency development"[5]. Along with energy efficiency initiatives and solar power, wind energy was identified as one of key potential areas for growth with the total potential for wind power in Morocco estimated at 7,936 TWh per year, equivalent to about 2,600 GW[6] of installed capacity. As of 2010, the total installed capacity of wind power stood at 286 MW[6].

The social and economic growth of the country, in areas of agriculture, industry, infrastructure, housing and tourism is expected to "triple the total installed electric capacity by 2020 from its current levels". The 'Le Project Marocain Integre L'energie Eolienne' (Moroccan Integrated Wind Energy Project) of the Ministry of Energy and Mines, Morocco, further elaborates that the Kingdom of Morocco plans to increase the wind power capacity to 2,000 MW by 2020[7].

---

[1] http://en.wikipedia.org/wiki/Morocco (accessed 15/04/2012)
[2] http://www.tradingeconomics.com/morocco/energy-imports-net-percent-of-energy-use-wb-data.html (accessed 15/04/2012)
[3] https://www.cia.gov/library/publications/the-world-factbook/fields/2045.html (accessed 15/04/2012)
[4] http://www.scidev.net/en/middle-east-and-north-africa/news/morocco-invests-us-3-2-billion-in-renewable-energy.html (accessed 15/04/2012)
[5] http://www.aderee.ma/index.php/en/aderee/nos-missions-en (accessed 15/04/2012)
[6] http://www.gwec.net/index.php?id=174 (accessed 15/04/2012)
[7] http://www.mem.gov.ma/Ministre/sommaire2.htm (accessed 17/04/2012)

(b) Framework for the implementation of the proposed PoA.

The objective of the 'ONE Wind Program of Activity, Morocco' hereafter referred to as 'PoA' is to increase the supply of renewable energy to the Moroccan national grid from renewable wind energy resources on a commercially sustainable basis.

Office National de l'Electricité (hereafter referred to as 'ONE') is the key project participant and Coordinating/Managing Entity (CME) for the PoA. ONE is the Moroccan state utility responsible for generation, transmission and distribution of electricity in Morocco. The PoA is part of ONE's strategy for promoting private sector participation for the development of the wind energy sector and directly benefit the energy security of the Kingdom of Morocco.

By implementing the PoA, it will provide a platform for ONE to access carbon revenues enabling ONE to provide competitive feed-in tariffs through sustainable power purchase agreements (PPAs) to private wind project developers in Morocco. The electricity generated by individual wind projects (CPAs) will be fed into the Moroccan national electricity grid that is owned and operated by ONE. By replacing part of the electricity that would have otherwise been generated by fossil fuel based power plants, the wind energy projects will directly contribute to the reduction of greenhouse gas (GHG) emissions.

ONE has two distinct roles in the development of wind energy projects in Morocco. As the state utility, ONE shall be responsible for shortlisting of wind energy projects (e.g. through tendering process), providing all necessary infrastructural support required to export the electricity into the national grid (e.g. setting up electricity subs-stations) and offering a sustainable feed-in tariff.

In its role as the CME, ONE will be responsible to ensure that potential CPAs meet the eligibility criteria for inclusion into the PoA and be responsible for coordination and management of the entire PoA and relevant tasks as elaborated in the 'CME Manual'. By establishing the PoA, ONE will encourage the development wind energy projects by providing CPA implementers easy access to additional carbon revenues.

All CPAs included under the PoA will require sharing part of the CERs (certified emission reduction) with ONE, in its role as the CME, on a mutually agreed basis and stated in the CPA inclusion agreement signed between ONE and individual wind project implementers.

The additional carbon revenue generated through the sale of CERs will enable ONE, in its role as the state utility, to provide the sustainable feed-in tariff over the technical life span of the CPAs. In the absence of carbon revenues, ONE will be financially constrained to ensure the required feed-in tariff and this will discourage the development of wind energy projects in Morocco.

All CPAs within the PoA will consist of greenfield wind energy projects that are large scale and connected to the Moroccan national electricity grid and comply with the 'Eligibility Criteria' as defined in Section B.2 of this document. Apart from tackling issues of energy security, reduction of GHG and increasing the share of renewables as highlighted by the government initiatives, success of the PoA will encourage private sector participation enabling new business to be set up, generating new employment opportunities, build a pool of technicians and experts in the field of renewables and allow Morocco to pioneer the development of renewables in North Africa.

(c) Include a confirmation that the PoA is a voluntary action by the CME.

The proposed PoA is a voluntary action by the state utility, ONE who is the CME of this PoA. The CME as the key project participant with the implementation of the PoA intends to facilitate an access to carbon revenues thereby allowing the state utility to provide commercially sustainable feed-in tariffs to wind project developers in Morocco. By providing a platform, the CME is taking care that individual wind projects benefit directly or indirectly from the additional carbon revenues generated.

A.3. CMEs and participants of PoA

>>

(a) Coordinating or managing entity of the PoA as the entity which communicates with the Board:

Office National de l'Electricité (also referred to as ONE in this document) is the CME of the proposed PoA, and is the entity that communicates with the Executive Board of the UNFCCC.

A.4. Party(ies)

Name of Party involved (host) indicates a host Party	Private and/or public entity(ies) project participants (as applicable)	Indicate if the Party involved wishes to be considered as project participant (Yes/No)
Kingdom of Morocco	Public entity: Office National de l'Electricité (ONE)	No

The contact information of ONE has been included in Annex 1 of this document.

A.5. Physical/ Geographical boundary of the PoA

>>

All CDM programme activities (CPAs) included in the PoA will be implemented within the territorial area of the Kingdom of Morocco. The POA will cover the geographic region located within the Kingdom of Morocco north of the southernmost point of the site of the first CPA at Tarfaya, as specified in the CPA-DD of the respective project.

A.6. Technologies/measures

>>

A typical CPA under this PoA will be a greenfield wind energy plant/park employing standard technology of wind turbine generators (WTGs). A CPA under this PoA may be a single plant or a cluster of such plants employing the same technology undertaken by the same project developer or project community. The PoA will be open to all technology providers and projects that meet the PoA's eligibility criteria.

The electricity generated by the CPAs will be evacuated to the national electricity grid of Morocco. The electricity demand in Morocco has grown steadily over the years and is predominantly based on thermal power generation with hydro and wind power constituting 16% of the total power generated in 2010. Hence the electricity generated by the wind turbines will result in a reduction of emissions of CO_2, NOx, SOx, soot, particles etc from thermal power plants.

A.7. Public funding of PoA

>>

Indicate whether the PoA receives public funding from Parties included in Annex I. If so:

(a) Provide information on Parties providing public funding.

The PoA receives a grant from the German government through GiZ for the development of the PoA only, including validation of PoA. The financial assistance is NOT provided for the investment and operation of the wind energy plant. The financial grant does not lead diversion of any official development assistance from the German government to the Kingdom of Morocco and neither does the German government or GiZ receive any CERs in lieu with the grant money.

(b) An affirmation from relevant parties in accordance with applicable provisions related to official development assistance is included in Appendix 2.

SECTION B. Demonstration of additionality and development of eligibility criteria

B.1. Demonstration of additionality for PoA

>>

Below are the general additionality criteria for the PoA:

(i) The proposed PoA is a voluntary coordinated action:

The proposed PoA is a voluntary coordinated action. There are no existing laws and regulations in the Kingdom of Morocco that enforce the implementation of wind energy projects under a PoA scheme. The government of Morocco wants to promote the growth of renewable energy including wind energy projects in Morocco through a set of incentives such as feed-in tariffs so that potential project developers can participate in such projects without absorbing all risks associated with such new technology and implementation or operation activity. ONE, the CME of the proposed PoA and the state utility has voluntarily developed the PoA to provide potential project developers a chance to benefit from additional revenues from sale of carbon credits. ONE shall coordinate all different CPAs that will form a part of the PoA and in return shall receive a percentage of CERs for the services rendered, hence the proposed PoA can be considered as a voluntary coordinated action.

(ii) In absence of this PoA, the voluntary coordinated action shall not be undertaken:

The energy requirement of Morocco has been heavily dependent on fossil fuel and imports from neighbouring countries. In order to reduce on this dependency, the government has set up an ambitious target to promote the growth of renewable energy including private participation for wind energy projects. ONE, the state utility and owner of national electricity grid have the onus of purchasing the electricity generated and providing attractive feed-in tariffs to attract investment in the sector. Moreover, given the nature of wind energy generation, ONE will also require to upgrade and strengthen the power units to support the base load. In the absence of additional revenues from sale of CERs, ONE has no financial incentive to offer attractive feed-in tariffs to potential project developers. Hence, in absence of the PoA there would be no CDM benefits and none of the potential CPAs shall be implemented.

Furthermore, as the PoA shall consist of one or more large scale projects as CPAs under methodology ACM 0002, version 13.0.0 compliance with the additionality related eligibility criteria stated in Section B.2 of the PoA-DD shall ensure that all relevant additionality-related guidelines, tools or requirements embedded in the methodologies are met:

B.2. Eligibility criteria for inclusion of a CPA in the PoA

>>

Criteria as defined by EB 65 [8]	Relevant Eligibility Criteria/Method of Verification
(a) The geographical boundary of the CPA including any time-induced boundary consistent with the geographical boundary set in the PoA;	The geographical boundary of the CPA including any time-induced boundary consistent with the geographical boundary set in the PoA, namely the host country, Kingdom of Morocco. The proposed CPA will be located in the geographic region located within the Kingdom of Morocco north of the southernmost point of the site of the first CPA at Tarfaya. The CPA shall comply with the guidelines for inclusion as defined by the host country DNA. Compliance: The criteria shall be verified by indicating the project location on a map of Morocco, to be included in Section A.7. of the CPA-DD, along with information included in sub-para (b) of this table, (e.g GPS coordinates, location of CPA). Receipt of the Host Country Approval / LoA shall be sufficient to demonstrate that the PoA fulfills the guidelines as defined by the host country. All CPAs included under the PoA and issued with a 'unique identification number' shall be considered compliant with the guidelines of the host country.
(b) Conditions to avoid double counting of emission reduction like unique identifications of product and end-user locations etc.	Data provided to the CME prior to inclusion in the PoA: • Name of the CPA • Installed capacity in MW • Location of the CPA - Address - GPS coordinates • Name of the wind farm developer • Contact information, namely: - Contact person, - Postal address, - Telephone number - Email address Data included in CPA-DD: • Unique Identification Number provided by the CME. Compliance: The CME shall be responsible for cross checking the data provided by the potential CPA owner /developer with publicly available online database and ONE's internal database of wind projects in Morocco as elaborated in PoA-DD Section C, para 3 'Technical

[8] EB 65, Annex 3: (para 14) http://cdm.unfccc.int/filestorage/E/6/T/E6TY7DMI28WGCUV5J0K3LAOHBQ9RFN/ eb65_repan03.pdf?t=Ynh8bTJxOTVjfDA6ARU1wd0kw2mTuSjIUBlf

	Review of CPA Inclusion' in 'Avoidance of Double Counting'. Upon satisfactory conclusion of the 'uniqueness' of the proposed project, a Unique Identification Number shall be issued by the CME (e.g. ONE/MAROC/WIND/ Project Name and Capacity') which shall be considered sufficient to avoid against double counting of emission reductions. Avoiding Double Counting: Should the project activity be already registered as stand-alone CDM project or form a part another registered PoA, the same shall NOT be considered for inclusion in the PoA. This will ensure against any potential errors caused by double counting of emission reduction.
(c) The specifications of technology/ measure including the level and type of service, performance specifications including compliance with testing/ certifications;	The following information to be included here: • Only projects that involve generation of electricity using wind turbine generator based technology are eligible for inclusion under the PoA. • The total installed capacity of wind turbine generators (WTGs) per CPA should not exceed 2,000 MW. • The electricity generated by the WTGs should be evacuated to the national electricity grid of Morocco. • The WTGs shall employ standard technology and specifications of the WTG manufacturer / company and comply with the IEC 614000/614001 (or latest version applicable thereof) standard/ certification. Compliance: Supporting evidences can include any of the following: FSR, commercial offers, purchase orders, permits, link to relevant web page (e.g. turbine specifications) and/or technical brochures of the WTG model that support the information included.
(d) Conditions to check the start date of the CPA through documentary evidence;	Indicate the actual / indicative start date of the project The actual start date shall comply with the definition in the CDM Glossary (EB 66, Annex 63) as the earliest date at which either the implementation or construction or real action of the project activity begins. If the actual start date is not available, an indicative start date can be provided. Evidence of the actual start date shall be made available at the time of verification. Compliance: CPA-DD shall provide actual or indicative start date in DD/MM/YYYY format. Evidence of the actual start date in line with the definition of CDM glossary shall be provided as evidence if available (actual start date) OR evidence shall be provided at the time of verification (in case an indicative start date is provided). The start date of the CPA should be after PoA start date

	which is 19/07/2012.
(e) Conditions that ensure compliance with applicability and other requirements of single or multiple methodologies	Each CPA must be applicable to and needs to apply the UNFCCC approved large scale methodology: 'ACM0002: Consolidated baseline methodology for grid-connected electricity generation from renewable sources' Version 13.0.0 and satisfy all applicable conditions as noted in Annex 3 of PoA-DD and Section B.2 of Generic-DD (Part II). Only projects that generate electricity through the use of wind turbines, supplies electricity to the Moroccan national electricity grid are eligible for inclusion. Compliance: The satisfactory fulfillment of eligibility criteria (c), i.e the proposed project is a grid connected wind energy project shall be deemed sufficient condition towards the fulfillment of this eligibility criteria.
(f) Conditions that ensure that CPAs meet the requirements pertaining to the demonstration of additionality	Additionality shall be demonstrated at CPA level as defined in section 'B.5. Demonstration of eligibility for a generic CPA' under the heading 'Demonstration of Additionality' and complies with the UNFCCC approved "Tool for the demonstration and assessment of additionality" version 6.0.0 (also referred as 'Additionality Tool' in this document). The demonstration of additionality will be done using the benchmark analysis method and the benchmark selected will be the default value for Morocco, post-tax return on equity as stated in the 'Guidelines On The Assessment Of Investment Analysis' (Version 5 – EB 62, Annex 5 or latest version thereof). Compliance: The post-tax return on equity shall be demonstrated using standardized financial analysis spreadsheet template available with the CME.
(g) The PoA-specific requirements stipulated by the CME including any conditions related to undertaking local stakeholder consultations and environmental impact analysis;	Local stakeholder consultation (LSC) is carried out at CPA level and necessary information included in section F of this document. Environmental impact analysis (EIA) is carried out at CPA level and necessary information is included in section E of this document. Compliance: A copy of the LSC report and EIA report shall be provided as supporting evidence.
(h) Conditions to provide an affirmation	A copy of affirmation that funding from Annex I

that funding from Annex I parties, if any, does not result in a diversion of official development assistance;	parties, if any, does not result in a diversion of official development assistance is to be provided by the project developer at the time of CPA inclusion. This information can be included in the affirmation letter as stated in sub-para (l) of this table. Compliance: A copy of the affirmation shall be included as a relevant Annexure to the CPA-DD.
(i) Target group if applicable	Not applicable The PoA is open to all participants / technology providers who fulfill the eligibility criteria of this PoA.
(j) Sampling requirement if applicable	Not applicable. 100% of CPAs will be monitored.
(k) Aggregation threshold and de-bundling check if applicable.	Not applicable. This PoA is requesting registration under large scale methodology – "ACM0002: Consolidated baseline methodology for grid-connected electricity generation from renewable sources" Version 13.0.0.
(l) Affirmation by the wind project developer.	Compliance: When requesting for inclusion, each project developer shall provide a letter including the following set of information / affirmation: - Formal application for inclusion of CPA in the PoA. - Affirmation that the inclusion is a voluntary action. - In case the project receives no 3rd party financial aid, then an affirmation of non-receipt of ODA shall be provided by the CPA implementer. In case the project receives any financial aid from an Annex 1 country, then a statement from the relevant authority of the Annex 1 country shall be submitted stating the financial aid does not result in diversion of ODA. - Affirmation that all equipment purchased will be new so as to avoid any potential leakage emissions. - Affirmation to understanding that the CPA crediting period shall not exceed the PoA end date. - Acceptance that the project developers are aware of terms and conditions of the PoA and agree that their project be subscribed to the PoA.
Specific requirements for PoAs as per ACM 0002 (version 13.0) methodology:	

(m) Identify that the proposed CPA complies with the 'identified type of CPA' proposed to be included under the PoA.	Renewable power generation technology: Only projects that generate electricity through the use of wind turbine generators and supplies electricity to the Moroccan electricity grid are eligible for inclusion. Project activity type: Only greenfield projects are eligible for inclusion under the PoA. Legal and regulatory framework: Only CPAs that are either directly implemented by the state utility ONE or awarded a PPA by the state utility are eligible for inclusion. CPAs that are developed by private parties shall also provide an affirmation that the project is a voluntary coordinated action. Compliance: Supporting evidences such as FSR, permits, approvals, PPAs, contracts, letters from appropriate government sanctioning authority (e.g. Commission for wind energy projects) etc that can be used to cross verify the above set of information.
(n) Ascertain that the technical and economic parameters of the CPA are within the identified limits of the wind energy technology.	Plant load factor: The PLF for the CPAs proposed to be included under the PoA should be 10% or higher and not exceed 59.3%. Size of Installation: The total installed capacity of the CPA should not exceed 2,000 MW per CPA. Compliance: A copy of the FSR, on-site measurements, historical data or other relevant study/document should be included to support the above conditions.
Note: The following Eligibility Criteria (o) and (p) pertain to project financials and are based on the existing investment climate in the host country at the time of drafting the PoA-DD. The parameters will be reviewed annually and adjusted to reflect the prevailing market condition.	
(o) Ascertain the parameters reflecting the investment climate for the proposed CPA comply with the existing regulations of Morocco or utility company.	Subsidies or other financial flows: For CPAs eligible for inclusion under the PoA, subsidies and other financial flows apart from equity and debt, if any should not exceed 25% of the total project cost. This limit may be revised every year after the PoA registration to reflect the existing market conditions. Soft loans if any are NOT considered as a subsidy under the current definition. Note: Subsidies if any shall be deducted from project costs. Soft loan shall be considered as debt but with applicable (lower) interest rate. Compliance: Provide evidence of project cost, equity/debt and % of subsidy/other financial flows involved if any and source of funding. Tariffs / PPAs: For CPAs developed by private

	developers, there should be a tariff agreement /PPA and the electricity tariff for CPAs included under the PoA should not exceed 1,600 MAD /MWh. This limit can be revised annually based on prevailing market conditions. Compliance: Provide a copy of a tariff agreement / PPA with ONE as supporting evidence. Depreciation: The rate of depreciation for WTGs used in the CPA, if considered in the financial analysis should not exceed the technical life span of the WTG (e.g. 20 years). Compliance: Please provide the technical life span of WTG and the rate of depreciation considered if any. Other Financial Parameter: The default value for Morocco for post-tax return on equity from the 'Guidelines on the assessment of Investment Analysis' (version 5) or latest version thereof should be considered as the financial benchmark. Compliance: The benchmark stated in the Guideline is the real IRR hence does not consider inflation. If the CPA implementer considers inflation rates in its financial analysis then the benchmark should be revised to consider nominal IRR, i.e real IRR + inflation.
(p) Ascertain the parameters reflecting the range of costs for the proposed CPA comply with the existing regulations of Morocco or utility company.	Capital Cost: Privately developed CPAs requesting inclusion under the PoA should be selected under a tender system. In case there is no tender involved, the capital cost of should lie within € 500 to € 3,000 per KW of installed capacity. These values can be revised on annual basis based on prevailing market condition. O&M Cost: Total O&M cost over the project life span for the CPA should not exceed 35% of the total revenue generated over the project life span. This limit can be revised after the first two years from the point of PoA registration to reflect the existing market condition, inflation, prevailing salaries and other factors that impact the project O&M costs. ODA: Projects that receive ODA towards the physical implementation of the project (e.g. purchase of land, turbines and equipment, I&C) shall not be eligible for inclusion.
Applicability of Tools as referred to in the methodology ACM 0002 version 13.0	
(q) Tool to calculate the emission factor	This tool may be applicable to estimate the OM, BM

for an electricity system.	and/or CM when calculating baseline emissions for a project activity that substitutes grid electricity. Compliance: Only wind energy projects that evacuate electricity into the national electricity grid of Morocco are eligible for inclusion under the PoA. The tool is not applicable if the project electricity system is located partially or totally in an Annex I country. Compliance: Only CPAs connected to the Moroccan national electricity grid are eligible for inclusion In case the OM, BM, CM calculations consider off-grid power plants, the total capacity of off-grid power plants (in MW) should be at least 10% of the total capacity of grid power plants in the electricity system; or the total electricity generation by off-grid power plants (in MWh) should be at least 10% of the total electricity generation by grid power plants in the electricity system; Compliance: No off-grid power plants shall be considered for the calculations of OM, BM and CM.

Note: The eligibility criteria table at CPA level are not required to include sub-para (i), (j) and (k) as the criteria are not applicable for CPAs for the PoA under consideration.

B.3. Application of methodologies

>>

The applicability criteria of UNFCCC approved large scale methodology, ACM0002 (EB 67, Annex 13, page 2) states: “This methodology is applicable to grid-connected renewable power generation project activities that (a) install a new power plant at a site where no renewable power plant was operated prior to the implementation of the project activity (greenfield plant); (b) involve a capacity addition; (c) involve a retrofit of (an) existing plant(s); or (d) involve a replacement of (an) existing plant(s).”

The objective of the PoA is to increase the supply of renewable energy to the Moroccan national grid from renewable wind energy resources, and hence fulfils the applicability criterion for the applied methodology - ACM0002: Consolidated baseline methodology for grid-connected electricity generation from renewable sources - Version 13.0.0.

List of tools associated with the above stated methodology:

Tool to calculate the emission factor for an electricity system (version 2.2.1)
Tool for the demonstration and assessment of additionality. (version 6.0.0)

All CPAs will be monitored and verified and hence no sampling plan is required.

SECTION C. Management system
>>

1. General Management of the PoA:

a) The PoA is being set up to encourage the development of grid connected wind power projects in Morocco and increase the supply of renewable energy into the country's electricity grid which is predominantly supplied by thermal power plants. This PoA aims to facilitate easier access for carbon financing to the state owned utility, Office National de l'Electricité to enable the utility offer favorable Power Purchase Agreements (PPAs) to potential project developers of grid connected wind power projects in Morocco.

b) The CME shall be Office National de l'Electricité ('ONE') with its office located at 65m Othman Ben Affan Street, Casablanca, Morocco

c) Signature power with regards to communication with the relevant bodies of the United Nations Framework Convention on Climate Change is established in the Modalities of Communication.

d) Each CPA must be applicable to and need to apply the CDM baseline and monitoring methodology 'ACM0002: Consolidated baseline methodology for grid-connected electricity generation from renewable sources' Version 13.0.0.

e) Only CPAs that fulfill the "Eligibility Criteria" as defined in Section B.2 of this document shall be eligible for inclusion in the PoA.

2. Responsibilities and Roles of the CME:

a) The key responsibilities of the CME, are as follows:

i) Ensuring compliance with the "Eligibility Criteria" prior to the inclusion of a CPA including but not limited to coordinating the validation of the inclusion.
ii) Based on its own discretion and understanding, the CME reserves the right to offer an "inclusion agreement" to a project developer to include the CPA under the PoA.
iii) Provide a copy of the generic PDD and assist/support in the completion of the CPA-DD.
iv) Oversee successful organization of a "Local Stakeholder Consultation" and "Environmental Impact Assessment" as per host country requirements.
v) Communication with regulatory bodies such as the UNFCCC on behalf of the CPAs.

b) The other responsibilities of the CME, are as follows:

i) Developing and maintaining a record keeping system, which includes but not limited to information related to inclusion of CPAs, monitoring data/records as obtained from CPAs, and making relevant information (ex. Grid Emission Factor) available to all stakeholders.

ii) Providing guidance to each CPA to develop and maintain a record keeping system for all relevant information (ex. net electricity exported to grid) and evidences (ex. utility bills).
iii) Providing guidance to each CPA to calculate the expected emission reductions and assistance as required for the preparation of the monitoring report.
iv) Other responsibilities that may be deemed required by the CME.

c) The PoA shall be managed by a 'CME or PoA Manager' to be appointed by the CME. Furthermore a 'Quality Manager' will be appointed and made responsible for supervising and controlling the PoA related procedures. The 'PoA Manger' and 'Quality Manager' can be the same person. Further assisting staff may be recruited and trained as applicable in accordance with procedures in the CME Manual.

d) Inclusion of CPAs and commercial terms of inclusion will require a written approval of the PoA Manager. The PoA Manager reserves the right to gauge whether a CPA fulfills the eligibility criteria for inclusion of CPA. No approval will be granted to CPA that does not fulfill the eligibility criteria as defined in the PoA-DD.

3. Technical Review of CPA Inclusion:

The CME is responsible for checking if the CPA is in compliance with the Eligibility Criteria (EC) established in the PoA-DD. The following tasks are to be performed by the CME:

a) Ensure that the project developers provide all necessary project information.
b) Check if the geographical boundaries of the CPA are located within the kingdom of Morocco. Obtain the exact GPS coordinates and mark the location on a map of Morocco.
c) Check if the technology employed in the CPA is consistent with the technology and methodology set forth in the PoA-DD.
d) Check if the start date of the project is in compliance with the definition as set forth by EC and documentary evidence if and when available shall be provided. Ensure that the start date is later than the start date of the GSC of the PoA.
e) Check if the Environmental Impact assessment (EIA) and Local Stakeholder Consultation (LSC) has been undertaken as per host country regulations.
f) Ensure that the project developers understand the terms and conditions of the PoA and secure necessary written evidences / agreements from relevant parties.
g) Check additionality compliance of the CPA once the CPA-DD is drafted.

Avoidance of Double Counting:

As stated in the eligibility criteria, (para b) the following data shall be provided by the CPA owner/developer to the CME prior to inclusion of the CPA in the PoA:

• Name of the CPA
• Capacity of installation in MW

• Location of the CPA
- Address
- GPS coordinates

• Name of the wind farm developer
• Contact information, namely:
- Contact person,
- Postal address,

- Telephone number
- Email address

The CME shall be responsible to check whether the proposed CPA is registered as an individual CDM project or included in another registered PoA. This will be done by cross checking the data provided by the CPA owner/developer prior to the inclusion of CPA (e.g. name of CPA, project developer, GPS coordinates etc) with publicly available database (e.g.. UNEP Risoe CDM pipeline and/or similar database such as http://cd4cdm.org/). Moreover, ONE as the state utility maintain their own internal database of wind energy projects in Morocco and are ideally placed to cross-check the CPA related information within Morocco. Once the uniqueness of the CPA is verified, the CME shall then issue a unique identification number to the project in the format – 'ONE/MAROC/WIND/Project Name and Capacity'. The unique identification number shall be stated in the CPA-DD and other letters of communications / letter of inclusion between the CME and the CPA owner/developer, and shall be considered a credible mode to verify against double counting of emission reduction.

If the project activity is already registered as a standalone CDM project or is included as part of another registered PoA, the project activity shall not be included in the PoA. This will prevent from any accidental double-counting of emission reductions.

4. Inclusion Agreement:

At the time of requesting inclusion, the project developer/owner/implementer shall provide a comprehensive letter that includes the following information as stated in eligibility criteria (l):

- Formal application for inclusion of CPA in the PoA.
- Affirmation that the inclusion is a voluntary action.
- Statement regarding diversion of ODA if any.
- Affirmation that all equipment purchased will be new to avoid any potential leakage emissions.
- Affirmation to understanding that the CPA crediting period shall not exceed the PoA end date.
- Acceptance that the project developers are aware of terms and conditions of the PoA and agree that their project be subscribed to the PoA.

In addition the CPA developer/owner/implementer shall also provide the information included in eligibility criteria (b) to allow the CME to cross verify if the project is already registered as a CDM project or part of another registered PoA:

• Name of the CPA
• Installed capacity in MW
• Location of the CPA
- Address
- GPS coordinates
• Name of the wind farm developer
• Contact information, namely:
- Contact person,
- Postal address,
- Telephone number
- Email address

In case of a positive check of the eligibility criteria of the intended CPA, ONE may decide to offer the intended CPA an agreement for inclusion. As the PoA is a voluntary coordinated action, ONE reserves the right to reject a project from inclusion under its PoA without giving any

reasons. Should it occur that some of eligibility criteria have not been fulfilled and believe that they will be fulfilled in the foreseeable future then such criteria shall be condition precedent for effectiveness inclusion of CPA, in the inclusion agreement.

Such inclusion agreement shall define the commercial terms and conditions, roles, responsibilities and rights of the project stakeholders. The inclusion agreement shall also define the ownership conditions for the emission reduction generated. The inclusion agreement may be established based on a template developed and/or reviewed by a competent attorney.

5. Documentation and DOE Management:

a) Upon successful granting of approval for inclusion of CPA, the CME shall provide a copy of the generic PDD to the project developer and provide guidance as required for the completion of the CPA-DD. The CPA Developer shall ensure that the information included in the PDD is accurate and up to date as possible for successful registration of the CPA.

b) If defined in the commercial terms and conditions, the CME shall reserve the right to develop the CPA-DD based on information provided by the project developer. The project developer shall be responsible for providing all required information in a timely, complete and accurate manner. Evidences and 3rd party reports/studies if any shall also be provided to the CME to support the development of the PDD.

c) If defined in the commercial terms and conditions, the CME shall be responsible for identifying and contacting potential DOEs for validation / verification of the CPA.

6. Guidance for Monitoring:

a) The CME shall assist each CPA with the implementation of a monitoring plan for parameters included in section B.7.1 of the CPA-DD. The key parameter that needs to be monitored is the net electricity generated by the CPA. Net electricity is defined as the total electricity exported to the grid after deductions of auxiliary consumption by the project site. This could be a single measurement based on bi-directional meter reading or separate electric meters for electricity exported to grid and electricity imported from the grid.

b) The measurement can be done based on electricity meters and/or bills/invoices as provided by the utility company. The actual monitoring procedure will be described in the CPA-DD based on actual project conditions.

c) The project developer shall be responsible for periodic recording of the data either in the form of log books or in electronic format and the data will be supported by documentary evidences such as utility bills / invoices etc. All data monitored and required for verification and issuance be kept and archived electronically for two years after the end of the crediting period or the last issuance of CERs, whichever occurs later;

7. Emission Reduction Calculation:

The CME shall ensure that the emission reduction for a stated monitoring period shall be calculated based on the formula as defined in section B.6.3 of the CPA-DD.

Emission reduction for a given year (ERy) is calculated as follows: $ER_y = BE_y – PE_y – LE_y$

Where,

BE_y = Baseline Emissions
PE_y = Project Emissions
LE_y = Leakage Emissions

Baseline Emissions:

The two key components required for the calculation of baseline emissions (BE_y) are:

$EG_{BL, y}$ = Quantity of net electricity supplied to the grid as a result of the implementation of the project activity in year y (MWh)
$EF_{CO2, grid, y}$ = Grid Emission Factor (GEF) of the Moroccan grid in year y (t CO_{2e} / MWh)

Paragraph 4 of this section provides an overview on the monitoring of net electricity. The GEF is calculated based on the UNFCCC approved "Tool to calculate the emission factor for an electricity system" version 2.2.1. The CME shall ensure that the most recent data is made available for the calculation of the grid emission factor. The GEF calculations may be outsourced to a 3rd party if so desired by the CME. "

Project Emissions:

Electricity generated from wind energy projects do not involve any on-site consumption of fossil fuel (ex. operation of diesel generator sets, fuel for boilers etc) and hence any project emissions from on-site fossil fuel consumption is zero.

Any auxiliary consumption of electricity by the project site is accounted for in the measurement of net electricity, hence $PE_y = 0$ and this is in compliance with the methodology (ACM 0002, version 13.0.0 equation 1, page 6).

Leakage Emissions:

As the CPAs will involve installation of new equipment and this will be confirmed by the CME prior to CPA inclusion; Eligibility Criteria para (l) "- Affirmation from the wind project developer / owner that all equipment purchased will be new so as to avoid any potential leakage emissions", hence CPAs will involve no retrofit or replacement of old equipment, therefore, leakage emissions, $LE_y = 0$.

Conclusion:

For grid connected wind power projects, as the project emissions and leakage are considered as zero, therefore $ER_y = BE_y$

As defined in the commercial terms and conditions, either the CME, project developer or a competent 3rd party will be responsible for the preparation of a Monitoring Report.

8. Technical Review of Monitoring Data:

a) Data recording / Data archiving:

The CME will maintain a central PoA monitoring database at its premises that will consist of individual CPA monitoring records for each CPA. The 'CPA monitoring record' is a terminology to describe the following sets of information that will be collated after the inclusion of the CPA:

1. Project Unique Identification Number / Naming System for each CPA.
2. Information provided by the project developer prior to CPA inclusion.
3. Net electricity generation data for the monitoring period
4. Supporting documentary evidences (ex. bills, invoices etc)
5. Grid Emission Factor calculations of historical and current monitoring period
6. Copies of previous monitoring reports
7. Verification status
8. Record of issued CERs
9. Other related supporting documentation (ex. email communication with UNFCCC)

b) **QA/QC:**

The CME will perform periodic quality check on the individual documents in the CPA monitoring record and ensure that the documents are accurate and up to date. The CME shall ensure that all above information is easily accessible to relevant 3rd parties (ex. DOE) at the time of verification.. All data monitored and required for verification and issuance be kept and archived electronically for two years after the end of the crediting period or the last issuance of CERs, whichever occurs later.

The CME will ensure that the grid emission factor (GEF) for the Moroccan grid is calculated as per the tool and copies of data made accessible to all relevant stakeholders. The CME shall cross check that the appropriate GEF is used for the calculation of emission reduction for a given monitoring period. The CME will also retain copies of the GEF calculation and all supporting information in the CPA Monitoring Record and made available to 3rd parties (ex. DOE) as required. The GEF calculation shall be kept and archived electronically for two years after the end of the crediting period or the last issuance of CERs, whichever occurs later;

c) Emergency Preparedness:

The CME shall ensure that all data recorded manually at individual project sites, if any (ex. log sheets), shall be photocopied and also stored in an electronic format (ex. scanned). Similarly all hard copies of documentary evidences (ex. utility bills) should be photocopied and stored in an electronic format. All hard copies and manually recorded data may be retained at the project site. However, the electronic versions of all recorded data and evidences should be stored on the project site and a copy retained by the CME in its office. All data will be backed up at periodic intervals. This will prevent any potential loss or damage of data.

9. Recruitment and Training:

a) In case additional personnel are needed for the CME to fulfil its duties, recruitment shall be undertaken on a competence basis. Experience with carbon related activities is preferred but not a precondition. Hiring shall take place in accordance with the labor laws of the host country with empathy placed on gender neutral equal employment policy.

b) Capacity building of new personnel shall be performed under the supervision of the PoA Manager or a person appointed by the PoA Manager to function as a mentor for at least a period of 6 months.

c) The training phase of 6 months shall include but not limited to the following activities:
   i. Observe an CPA Inclusion
   ii. Observe calculation of emission reduction
   iii. Observe a monitoring training session for a CPA
   iv. Observe the conduction of a monitoring procedure
   v. Observe the conduction of a local stakeholder consultation process
   vi. Observe the verification for one CPA if possible

d) During this training phase special emphasis shall be laid on accuracy, correct usage of wording and formatting as set forth by the relevant entities such as the UNFCCC – including but not limited to footnote formatting.

e) New personnel will be instructed by the PoA Manager on the organizations social responsibility and internal confidentiality standards. They will also require signing that they have recipient of the said instruction.

f) Record of arrangements for training and capacity development of new personnel to be recruited within the CME team shall be undertaken in line with ONE's existing policies. The current members of the CME team constitute of personnel who are current full time employees of ONE and selected based on individual experience and knowledge of CDM. Upon successful registration of the PoA and additional capacity requirement, the CME team shall call upon additional personnel from within ONE's existing employees. Training and capacity building programs shall be undertaken and recorded in line with existing company guidelines. This will ensure uniformity with the state utility's internal rules and regulations.

10. Continuous Improvement and Document Control Procedures:

a) The CME shall develop a separate managing and operating plan that will include updated information included in this section but only after the registration of the PoA. The physical preparation of this operating and management plan may be carried out by a competent 3rd party consultant in line with the requirements of the UNFCCC. However the CME shall retain the overall responsibility of the contents included in such a document, and the updating and circulation of such a document to relevant parties as it may deem fit.

b) The CME will invite comments from relevant stakeholders to share their experience on using the information included in this section / separate managing and operating plan through an open feedback session. The location and interval of such a meeting can be decided by the CME based on the logistics and complexity of the PoA at that given point of time.

c) The PoA Manager will then be responsible to gauge whether the suggestions are project specific or universally applicable to all CPAs. If it is universal, the same will be discussed with all stakeholders and if there is a general agreement on the need for improvement or revision of a stated procedure the same shall be incorporated in writing.

d) In addition, if and when the CME is notified by the UNFCCC that any documentation would need to be revised, the CME will notify project developers, if relevant, of this in writing as soon

as possible. The documents would be revised, by the CME with the help of 3rd party consultant as and when required (ex. change in the methodology) or when required by UNFCCC norms.

e) The CME will communicate revisions it would undertake in writing to project developers before communicating such revisions in writing to the UNFCCC. The revisions that would be required by the UNFCCC would be implemented as soon as possible. The timeframe would depend on the specifics of any required revision.

f) All relevant documents (ex. CPA-DDs) will be made available in both electronic format and hard copies to individual CPA. The CME will make a provision such that a copy of the available version of the GEF and monitoring procedures, if any, are available, such that it can be easily accessed by individual project developers.

SECTION D. Duration of PoA

D.1. Start date of PoA

>>

19/07/2012 (Start date of the GSC)

D.2. Length of the PoA

>>

The length of the PoA is 28 years from the date of registration of the PoA. This is in line with the procedure as described in EB 47, Annex 27, para 4(h).

SECTION E. Environmental impacts

E.1. Level at which environmental analysis is undertaken

>>

Environmental analysis is undertaken at CPA level as the Government of Morocco requires renewable energy projects including wind energy projects to undertake individual environmental impact assessment.

E.2. Analysis of the environmental impacts

>>

This analysis shall be carried out at individual CPA level, and a summary included in the CPA-DD.

E.3. Environmental impact assessment

>>

The assessment shall be undertaken at CPA level and a summary included in the CPA-DD.

SECTION F. Local stakeholder comments

F.1. Solicitation of comments from local stakeholders

>>

Local stakeholder consultation will be done at the CPA level. This is considered appropriate since the stakeholders associated with the different CPAs in Morocco would be different and specific to each CPA, as the CPA locations can be anywhere within the kingdom of Morocco.

F.2. Summary of comments received

>>

This shall be undertaken at CPA level and a summary provided in the CPA-DD

F.3. Report on consideration of comments received

>>

This shall be undertaken at CPA level and elaborated in the CPA-DD.

SECTION G. Approval and authorization

>>

The Host Country Approval issued by the Moroccan DNA (Ministry of Energy, Mining, Water and Environment) is available via letter dated 3rd August 2012, issue number 05580.

PART II. Generic component project activity (CPA)

SECTION A. General description of a generic CPA

A.1. Purpose and general description of generic CPAs

>>

The "ONE Wind Project Activity, Morocco" PoA is being developed by ONE, the state utility of the kingdom of Morocco and the CME of the project. All project activities (CPAs) to be included under the PoA are required to be wind energy parks connected to the Moroccan grid and shall comply with the Eligibility Criteria as described in Section B.2 of the PoA-DD.

SECTION B. Application of a baseline and monitoring methodology

B.1. Reference of the approved baseline and monitoring methodology(ies) selected

>>

The PoA is requesting registration under UNFCCC approved (EB 67, Annex 13) large scale methodology "ACM0002: Consolidated baseline methodology for grid-connected electricity generation from renewable sources" Version 13.0.0.

List of tools associated with the above stated methodology:

Tool to calculate the emission factor for an electricity system (version 2.2.1) - EB 63 Annex 19
Tool for the demonstration and assessment of additionality. (version 6.0.0) - EB 65 Annex 21

B.2. Application of methodology(ies)

>>

The applicability criteria of UNFCCC approved large scale methodology, ACM0002 ver 13.0.0 states: "This methodology is applicable to grid-connected renewable power generation project activities that (a) install a new power plant at a site where no renewable power plant was operated prior to the implementation of the project activity (greenfield plant); (b) involve a capacity addition; (c) involve a retrofit of (an) existing plant(s); or (d) involve a replacement of (an) existing plant(s)."

The objective of the PoA is to increase the supply of renewable energy to the Moroccan national grid from renewable wind energy resources, and hence fulfils the applicability criterion for the applied methodology. The following table demonstrates the applicability conditions of ACM 0002 with respect to the project type/technology and generic CPAs:

Applicability Condition	Applicability Justification
1. This methodology is applicable to grid-connected renewable power generation project activities that (a) install a new power plant at a site where no renewable power plant was operated prior to the implementation of the project activity (greenfield plant); (b) involve a capacity addition; (c) involve a retrofit of (an) existing plant(s); or (d) involve a replacement of (an) existing plant(s).	Applicable The generic CPA will involve the installation of a new grid-connected wind energy park (greenfield plant).
2. The methodology is applicable under the following conditions:	Applicable

The project activity is the installation, capacity addition, retrofit or replacement of a power plant/unit of one of the following types: hydro power plant/unit (either with a run-of-river reservoir or an accumulation reservoir), wind power plant/unit, geothermal power plant/unit, solar power plant/unit, wave power plant/unit or tidal power plant/unit;	The generic CPA will constitute the installation of a "wind power plant/unit".
3. In the case of capacity additions, retrofits or replacements (except for capacity addition projects for which the electricity generation of the existing power plant(s) or unit(s) is not affected): the existing plant started commercial operation prior to the start of a minimum historical reference period of five years, used for the calculation of baseline emissions and defined in the baseline emission section, and no capacity addition or retrofit of the plant has been undertaken between the start of this minimum historical reference period and the implementation of the project activity;	Not Applicable Generic CPAs shall be "greenfield" installation, hence would not involve capacity addition, retrofits or replacements.
4. Hydro power project Note: As the criterion is not applicable, the subsequent applicability conditions with relation to hydro power projects have not been included for further discussion.	Not Applicable The generic CPA will constitute the installation of a "wind power plant/unit" and NOT hydro projects.
5. The methodology is not applicable to the following: • Project activities that involve switching from fossil fuels to renewable energy sources at the site of the project activity, since in this case the baseline may be the continued use of fossil fuels at the site; • Biomass fired power plants; • A hydro power plant2 that results in the creation of a new single reservoir or in the increase in an existing single reservoir where the power density of the reservoir is less than 4 W/m2.	Applicable The generic CPA would not involve fuel switch, biomass or hydro power based technologies.
6. Applicability condition for the 'Tool to calculate the emission factor for an electricity system' that determines the CO2 emission factor for the displacement of electricity generated by power plants in an electricity system, by calculating the combined margin emission factor (CM) of the electricity system.	Applicable The generic CPA will constitute the generation of electricity through wind power plant/unit and the electricity will displace electricity generated by power plants of the electricity system, i.e. the national electricity grid of Morocco.
7. Applicability condition for the 'Tool for the demonstration and assessment of additionality' for projects seeking registration under ACM 0002	Applicable The methodology ACM 0002

large scale methodology.	version 13.0 states that the additionality (for generic CPAs) shall be demonstrated and assessed using the 'Tool for the demonstration and assessment of additionality' agreed by the Board, which is available on the UNFCCC CDM website. (Ref: Section II, Additionality)

B.3. Sources and GHGs

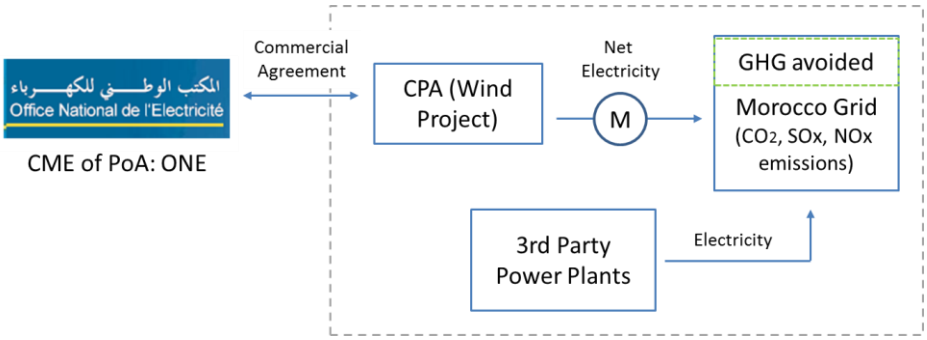

Fig: Schematic representation of the project boundary

Source		GHGs	Included?	Justification/Explanation
Baseline Scenario	Emissions from electricity generation in fossil fuel fired power plants that are displaced due to the project activity	CO_2	Yes	Main emission source
		CH_4	No	Minor emission source
		N_2O	No	Minor emission source
Project Scenario	Emissions from electricity generation from the wind energy project (CPA) under consideration	CO_2	No	Emissions from auxiliary electricity consumption by the project site will be accounted for in the calculation of "net electricity"
		CH_4	No	Minor emission source
		N_2O	No	Minor emission source

B.4. Description of baseline scenario

>>

The methodology ACM 0002 version 13.0.0, defines the baseline scenario if the project activity is the installation of a new grid-connected renewable power plant/unit, as the following:

"Electricity delivered to the grid by the project activity would have otherwise been generated by the operation of grid-connected power plants and by the addition of new generation sources, as reflected in the combined margin (CM) calculations described in the Tool to calculate the emission factor for an electricity system."

Description of the baseline scenario:

In accordance with ACM0002 version 13.0.0, baseline emissions are equal to electricity generated by the wind project activity and delivered to the Moroccan electric grid, multiplied by the baseline grid emission factor. The baseline grid emission factor is equal to the combined margin: a weighted average of the operating margin emission factor (with a relative weight of 75%) and the build margin emission factor (with a relative weight of 25%).

For Morocco, this baseline scenario mostly consists of the continued production of electricity from fossil fuels in thermal power generation plants.

B.5. Demonstration of eligibility for a generic CPA

>>

Criteria as defined by EB 65 [9]	Relevant Eligibility Criteria/Method of Verification
(a) The geographical boundary of the CPA including any time-induced boundary consistent with the geographical boundary set in the PoA;	The geographical boundary of the CPA including any time-induced boundary consistent with the geographical boundary set in the PoA, namely the host country, Kingdom of Morocco. The proposed CPA will be located in the geographic region located within the Kingdom of Morocco north of the southernmost point of the site of the first CPA at Tarfaya. The CPA shall comply with the guidelines for inclusion as defined by the host country DNA. Compliance: The criteria shall be verified by indicating the project location on a map of Morocco, to be included in Section A.7. of the CPA-DD, along with information included in sub-para (b) of this table, (e.g GPS coordinates, location of CPA). Receipt of the Host Country Approval / LoA shall be sufficient to demonstrate that the PoA fulfills the guidelines as defined by the host country. All CPAs included under the PoA and issued with a 'unique identification number' shall be considered compliant with the guidelines of the host country.
(b) Conditions to avoid double counting of emission reduction like unique identifications of product and end-user locations etc.	Data provided to the CME prior to inclusion in the PoA: • Name of the CPA • Installed capacity in MW • Location of the CPA - Address - GPS coordinates • Name of the wind farm developer • Contact information, namely: - Contact person,

[9] EB 65, Annex 3: (para 14) http://cdm.unfccc.int/filestorage/E/6/T/E6TY7DMI28WGCUV5J0K3LAOHBQ9RFN/ eb65_repan03.pdf?t=Ynh8bTJxOTVjfDA6ARU1wd0kw2mTuSjIUBlf

	- Postal address, - Telephone number - Email address Data included in CPA-DD: • Unique Identification Number provided by the CME. Compliance: The CME shall be responsible for cross checking the data provided by the potential CPA owner /developer with publicly available online database and ONE's internal database of wind projects in Morocco as elaborated in PoA-DD Section C, para 3 'Technical Review of CPA Inclusion' in 'Avoidance of Double Counting'. Upon satisfactory conclusion of the 'uniqueness' of the proposed project, a Unique Identification Number shall be issued by the CME (e.g. ONE/MAROC/WIND/ Project Name and Capacity') which shall be considered sufficient to avoid against double counting of emission reductions. Avoiding Double Counting: Should the project activity be already registered as stand-alone CDM project or form a part another registered PoA, the same shall NOT be considered for inclusion in the PoA. This will ensure against any potential errors caused by double counting of emission reduction.
(c) The specifications of technology/ measure including the level and type of service, performance specifications including compliance with testing/ certifications;	The following information to be included here: • Only projects that involve generation of electricity using wind turbine generator based technology are eligible for inclusion under the PoA. • The total installed capacity of wind turbine generators (WTGs) per CPA should not exceed 2,000 MW. • The electricity generated by the WTGs should be evacuated to the national electricity grid of Morocco. • The WTGs shall employ standard technology and specifications of the WTG manufacturer / company and comply with the IEC 614000/614001 (or latest version applicable thereof) standard/ certification. Compliance: Supporting evidences can include any of the following: FSR, commercial offers, purchase orders, permits, link to relevant web page (e.g. turbine specifications) and/or technical brochures of the WTG model that support the information included.
(d) Conditions to check the start date of the CPA through documentary evidence;	Indicate the actual / indicative start date of the project The actual start date shall comply with the definition in the CDM Glossary (EB 66, Annex 63) as the earliest date at which either the implementation or construction or real action of the project activity begins. If the actual start date is not available, an indicative

	start date can be provided. Evidence of the actual start date shall be made available at the time of verification. Compliance: CPA-DD shall provide actual or indicative start date in DD/MM/YYYY format. Evidence of the actual start date in line with the definition of CDM glossary shall be provided as evidence if available (actual start date) OR evidence shall be provided at the time of verification (in case an indicative start date is provided). The start date of the CPA should be after PoA start date which is 19/07/2012.
(e) Conditions that ensure compliance with applicability and other requirements of single or multiple methodologies	Each CPA must be applicable to and needs to apply the UNFCCC approved large scale methodology: 'ACM0002: Consolidated baseline methodology for grid-connected electricity generation from renewable sources' Version 13.0.0 and satisfy all applicable conditions as noted in Annex 3 of PoA-DD and Section B.2 of Generic-DD (Part II). Only projects that generate electricity through the use of wind turbines, supplies electricity to the Moroccan national electricity grid are eligible for inclusion. Compliance: The satisfactory fulfillment of eligibility criteria (c), i.e the proposed project is a grid connected wind energy project shall be deemed sufficient condition towards the fulfillment of this eligibility criteria.
(f) Conditions that ensure that CPAs meet the requirements pertaining to the demonstration of additionality	Additionality shall be demonstrated at CPA level as defined in section 'B.5. Demonstration of eligibility for a generic CPA' under the heading 'Demonstration of Additionality' and complies with the UNFCCC approved "Tool for the demonstration and assessment of additionality" version 6.0.0 (also referred as 'Additionality Tool' in this document). The demonstration of additionality will be done using the benchmark analysis method and the benchmark selected will be the default value for Morocco, post-tax return on equity as stated in the 'Guidelines On The Assessment Of Investment Analysis' (Version 5 – EB 62, Annex 5 or latest version thereof). Compliance: The post-tax return on equity shall be demonstrated using standardized financial analysis spreadsheet template available with the CME.

(g) The PoA-specific requirements stipulated by the CME including any conditions related to undertaking local stakeholder consultations and environmental impact analysis;	Local stakeholder consultation (LSC) is carried out at CPA level and necessary information included in section F of this document. Environmental impact analysis (EIA) is carried out at CPA level and necessary information is included in section E of this document. Compliance: A copy of the LSC report and EIA report shall be provided as supporting evidence.
(h) Conditions to provide an affirmation that funding from Annex I parties, if any, does not result in a diversion of official development assistance;	A copy of affirmation that funding from Annex I parties, if any, does not result in a diversion of official development assistance is to be provided by the project developer at the time of CPA inclusion. This information can be included in the affirmation letter as stated in sub-para (l) of this table. Compliance: A copy of the affirmation shall be included as a relevant Annexure to the CPA-DD.
(i) Target group if applicable	Not applicable The PoA is open to all participants / technology providers who fulfill the eligibility criteria of this PoA.
(j) Sampling requirement if applicable	Not applicable. 100% of CPAs will be monitored.
(k) Aggregation threshold and de-bundling check if applicable.	Not applicable. This PoA is requesting registration under large scale methodology – "ACM0002: Consolidated baseline methodology for grid-connected electricity generation from renewable sources" Version 13.0.0.
(l) Affirmation by the wind project developer.	Compliance: When requesting for inclusion, each project developer shall provide a letter including the following set of information / affirmation: - Formal application for inclusion of CPA in the PoA. - Affirmation that the inclusion is a voluntary action. - In case the project receives no 3rd party financial aid, then an affirmation of non-receipt of ODA shall be provided by the CPA implementer. In case the project receives any financial aid from an Annex 1 country, then a statement from the relevant authority of the Annex 1 country shall be submitted stating the financial aid does not result in diversion of ODA.

	- Affirmation that all equipment purchased will be new so as to avoid any potential leakage emissions. - Affirmation to understanding that the CPA crediting period shall not exceed the PoA end date. - Acceptance that the project developers are aware of terms and conditions of the PoA and agree that their project be subscribed to the PoA.
Specific requirements for PoAs as per ACM 0002 (version 13.0) methodology:	
(m) Identify that the proposed CPA complies with the 'identified type of CPA' proposed to be included under the PoA.	Renewable power generation technology: Only projects that generate electricity through the use of wind turbine generators and supplies electricity to the Moroccan electricity grid are eligible for inclusion. Project activity type: Only greenfield projects are eligible for inclusion under the PoA. Legal and regulatory framework: Only CPAs that are either directly implemented by the state utility ONE or awarded a PPA by the state utility are eligible for inclusion. CPAs that are developed by private parties shall also provide an affirmation that the project is a voluntary coordinated action. Compliance: Supporting evidences such as FSR, permits, approvals, PPAs, contracts, letters from appropriate government sanctioning authority (e.g. Commission for wind energy projects) etc that can be used to cross verify the above set of information.
(n) Ascertain that the technical and economic parameters of the CPA are within the identified limits of the wind energy technology.	Plant load factor: The PLF for the CPAs proposed to be included under the PoA should be 10% or higher and not exceed 59.3%. Size of Installation: The total installed capacity of the CPA should not exceed 2,000 MW per CPA. Compliance: A copy of the FSR, on-site measurements, historical data or other relevant study/document should be included to support the above conditions.
Note: The following Eligibility Criteria (o) and (p) pertain to project financials and are based on the existing investment climate in the host country at the time of drafting the PoA-DD. The parameters will be reviewed annually and adjusted to reflect the prevailing market condition.	
(o) Ascertain the parameters reflecting the investment climate for the proposed CPA comply with the existing regulations of Morocco or utility company.	Subsidies or other financial flows: For CPAs eligible for inclusion under the PoA, subsidies and other financial flows apart from equity and debt, if any should not exceed 25% of the total project cost. This limit may be revised every year after the PoA registration to reflect the existing market conditions. Soft loans if any

	are NOT considered as a subsidy under the current definition. Note: Subsidies if any shall be deducted from project costs. Soft loan shall be considered as debt but with applicable (lower) interest rate. Compliance: Provide evidence of project cost, equity/debt and % of subsidy/other financial flows involved if any and source of funding. Tariffs / PPAs: For CPAs developed by private developers, there should be a tariff agreement /PPA and the electricity tariff for CPAs included under the PoA should not exceed 1,600 MAD /MWh. This limit can be revised annually based on prevailing market conditions. Compliance: Provide a copy of a tariff agreement / PPA with ONE as supporting evidence. Depreciation: The rate of depreciation for WTGs used in the CPA, if considered in the financial analysis should not exceed the technical life span of the WTG (e.g. 20 years). Compliance: Please provide the technical life span of WTG and the rate of depreciation considered if any. Other Financial Parameter: The default value for Morocco for post-tax return on equity from the 'Guidelines on the assessment of Investment Analysis' (version 5) or latest version thereof should be considered as the financial benchmark. Compliance: The benchmark stated in the Guideline is the real IRR hence does not consider inflation. If the CPA implementer considers inflation rates in its financial analysis then the benchmark should be revised to consider nominal IRR, i.e real IRR + inflation.
(p) Ascertain the parameters reflecting the range of costs for the proposed CPA comply with the existing regulations of Morocco or utility company.	Capital Cost: Privately developed CPAs requesting inclusion under the PoA should be selected under a tender system. In case there is no tender involved, the capital cost of should lie within € 500 to € 3,000 per KW of installed capacity. These values can be revised on annual basis based on prevailing market condition. O&M Cost: Total O&M cost over the project life span for the CPA should not exceed 35% of the total revenue generated over the project life span. This limit can be revised after the first two years from the point of PoA

	registration to reflect the existing market condition, inflation, prevailing salaries and other factors that impact the project O&M costs. ODA: Projects that receive ODA towards the physical implementation of the project (e.g. purchase of land, turbines and equipment, I&C) shall not be eligible for inclusion.
Applicability of Tools as referred to in the methodology ACM 0002 version 13.0	
(q) Tool to calculate the emission factor for an electricity system.	This tool may be applicable to estimate the OM, BM and/or CM when calculating baseline emissions for a project activity that substitutes grid electricity. Compliance: Only wind energy projects that evacuate electricity into the national electricity grid of Morocco are eligible for inclusion under the PoA. The tool is not applicable if the project electricity system is located partially or totally in an Annex I country. Compliance: Only CPAs connected to the Moroccan national electricity grid are eligible for inclusion In case the OM, BM, CM calculations consider off-grid power plants, the total capacity of off-grid power plants (in MW) should be at least 10% of the total capacity of grid power plants in the electricity system; or the total electricity generation by off-grid power plants (in MWh) should be at least 10% of the total electricity generation by grid power plants in the electricity system; Compliance: No off-grid power plants shall be considered for the calculations of OM, BM and CM.

Demonstration of Additionality:

The "Standard for demonstration of Additionality, development of Eligibility criteria and application of multiple Methodologies for PoA" version 1.0 (EB 65, Annex 3) or the "PoA Standard" states: "PoAs that consist of one or more large scale projects as CPAs shall include eligibility criteria derived from all the relevant requirements contained in the additionality section of the large scale methodologies."

The additionality section of ACM 0002, ver 13.0.0 states "The additionality of the project activity shall be demonstrated and assessed using the 'Tool for the demonstration and assessment of additionality' agreed by the Board, which is available on the UNFCCC CDM website."

As noted in paragraph (f) of the Eligibility Criteria table, the additionality will demonstrated at CPA level in line with the "Tool for the demonstration and assessment of additionality" version 6.0.0:

Step 1. Identification of alternative scenarios:

Para 4 of the additionality tool states "Project activities that apply this tool in context of approved consolidated methodology ACM0002, only need to identify that there is at least one credible and feasible alternative that would be more attractive than the proposed project activity."

The credible and feasible alternative if the proposed project activity is not undertaken is the continuation of the current situation, i.e. to use all power generation equipment that was already in use prior to the implementation of the project activity and undertaking business as usual maintenance. The additional power generated under the project would be generated in existing and new grid-connected power plants in the electricity system.

Sub-step 2: Investment Analysis:

Sub-step 2a: Determine appropriate analysis method

All CPAs shall demonstrate additionality using the benchmark analysis method (Option III).

Sub-step 2b: Option III. Apply benchmark analysis

The benchmark analysis method shall be based on post-tax return on equity.

As per the "Guidelines on the assessment of Investment Analysis" version 5.0 (EB 62, Annex 5, para 8 of Appendix), the default value at the time of drafting of PoA-DD for post-tax return on equity on renewable energy projects in Morocco post tax is noted as 12% for the total investment. As stated under 'Note' preceding eligibility criteria 'o' and 'p', the financial parameters listed under 'o' and 'p' including the benchmark may be reviewed annually to reflect the prevailing market condition.

For all CPAs, the benchmark selected will be the default value for Morocco, post-tax return on equity as stated in the 'Guidelines On The Assessment Of Investment Analysis' (Version 5 – EB 62, Annex 5 or latest version thereof).

Sub-step 2c. Calculation and comparison of financial indicators:

As per the "Tool for the demonstration and assessment of additionality" version 6.0 (EB 65, Annex 21, Sub-step 2c), relevant parameters (e.g. costs, revenues etc) are to be considered for the calculation of the financial indicator, which in the case of CPAs shall be the benchmark as described in Sub-step 2b.

To ensure that all relevant key parameters are considered uniformly by future CPAs, the calculation for return on equity shall be based on a standardized spreadsheet model as provided by the CME during the development of the first CPA.

Table: Basic parameters of proposed project based on the standardized spreadsheet format for additionality assessment:

Wind Power Project Generation (EC m)				**O&M Cost (EC p)**		$
Project Name				year	Fixed O&M	variable O&M
Project Owner				1		
Number of Turbines				2		
Turbine Size (MW)				3		
Project Size (kW) (EC n)				4		
Plant Load Factor (EC n)				5		
Annual Hours				6		
				7		
Capital Cost (EC p)	cost	share		8		
				9		
Wind Turbines				10		
Other				11		
Total Cost				12		
				13		
Subsidy (EC o)				14		
Subsidy				15		
				16		
PPA (EC o)				17		
Power Purchase Agreement Rate ($/kWh)				18		
				19		
Equity Structure				20		
Equity Investor Contribution						
Total Debt						
				Corporate Tax		
				Corporate tax rate		
Project Debt						
Total Debt				**Depreciation (EC o)**	#DIV/0!	
Debt Term in Years						
Interest Rate				Sensitivity analysis simulation		
Annual Debt Payment				Turbine cost	0%	
Start Year				O&M cost	0%	
End year				Annual net electricity generation	0%	
Inflation Ratio				Price cost	0%	
ROE				Price of CER (USD/CER assumed)	5	
ROE (with CER)						
Benchmark (EC o)						

The rate of depreciation for WTGs used in the CPA, considered in the financial analysis should not exceed the technical life span of the WTG (e.g. 20 years) and shall be based on a 'straight line' rate of depreciation.

(2) Comparison of return on equity with the financial benchmark:

In accordance with benchmark analysis (Option III), state if the financial indicator (equity IRR) of the proposed wind project is lower than the benchmark, for the CPA to be considered as financially inattractive.

Basic parameters of proposed project:

Financial benchmark	%
ROE without CDM	%

(3) Sensitivity Analysis:

For the proposed CPA, a sensitivity analysis must be carried out for variables (without CDM benefit), within a range of -10% to +10%. Only variables that constitute more than 20% of either total project costs or total project revenues should be subjected to reasonable variation. The variables that are subjected to the sensitivity analysis are as follows:

Table: Sensitivity Analysis:

Parameter	**-10%**	**0%**	**10%**
CAPEX			
Cost of Wind Turbine			
O&M Cost			

Net Electricity Generation			
PPA (Power purchase agreement)			

Provide a conclusion of the investment analysis and include the percentage increase or decrease for each of the applicable parameters to meet the benchmark.

Step 3. Barrier analysis

The CPA chooses not to apply the barrier analysis.

Step 4. Common practice analysis

Step 4. Common Practice Analysis

Step 1: Calculate applicable output range as +/-50% of the design output or capacity of the proposed project activity:

State the applicable output range. For e.g. if the installed capacity is 100 MW, the applicable output range is between 50 MW to 100 MW.

Step 2: In the applicable geographical area, identify all plants that deliver the same output or capacity, within the applicable output range calculated in Step 1, as the proposed project activity and have started commercial operation before the start date of the project. Note their number N_{all}. Registered CDM project activities shall not be included in this step;

The applicable geographic area is the entire Kingdom of Morocco to which the PoA is applicable. The table below lists all energy projects in Morocco based on installed capacity and technology:

Power Plant	Capacity, MW	Fuel / Technology

From the above table it can be determined that N_{all} = 'X'

Step 3: Within plants identified in Step 2, identify those that apply technologies different that the technology applied in the proposed project activity. Note their number N_{diff}.

N_{diff} = 'Y'

Step 4: Calculate factor $F=1-N_{diff}/N_{all}$ representing the share of plants using technology similar to the technology used in the proposed project activity in all plants that deliver the same output or capacity as the proposed project activity.

F = 1 – ('Y'/'X')

The proposed project is not a common practice if the factor **F<0.2** and $\mathbf{N_{all} - N_{diff}}$ is less than 3**,** thus satisfying the criteria mentioned in the tool for additionality.

B.6. Estimation of emission reductions of a generic CPA
B.6.1. Explanation of methodological choices
>>
According to ACM 0002 version 13.0.0, emission reductions are calculated as follows:

ERy = BEy – PEy

Where:
ERy = Emission reductions in year y (t CO_{2e})
BEy = Baseline emissions in year y (t CO_{2e})
PEy = Project emissions in year y (t CO_{2e})

For estimation of emissions reductions prior to validation, the emission reduction is identical to the ex post monitoring and is described as below.

Project Emissions:

The methodology ACM 0002, version 13.0.0 states that for most renewable power generation project activities, PEy = 0.

However, some project activities may involve project emissions that can be significant. These emissions shall be accounted for, by using the following equation:

$PEy = PE_{FF,y} + PE_{GP,y} + PE_{HP,y}$

Where:
PEy = Project emissions in year y (tCO_{2e})
$PE_{FF,y}$ = Project emissions from fossil fuel consumption in year y (tCO_{2e})
$PE_{GP,y}$ = Project emissions from the operation of geothermal power plants due to the release of non-condensable gases in year y (tCO_{2e})
$PE_{HP,y}$ = Project emissions from reservoirs of hydro power plants in year y (tCO_{2e})

As the proposed project is a wind energy project, project emissions from the operation of geothermal power plants and hydro power plants are not applicable, hence $PE_{GP,y} = PE_{HP,y} = 0$

Furthermore, as the generic CPA do not have any on-site fossil fuel consumption, hence $PE_{FF,y} = 0$

Baseline Emissions:

As discussed in the baseline scenario only CO_2 emissions from electricity generation in fossil fuel fired power plants that are displaced due to the project activity will be considered for estimation of baseline emissions (BEy). The methodology assumes that all project electricity generation above baseline levels would have been generated by existing grid-connected power plants and the addition of new grid-connected power plants.

The baseline emissions are calculated as follows:

$BEy = EG_{PJ.y} \cdot EF_{grid,CM,y}$

Where:
BEy = Baseline emissions in year y (tCO2)

$EG_{PJ,y}$ = Quantity of net electricity generation that is produced and fed into the grid as a result of the implementation of the CDM project activity in year y, (MWh)
$EF_{grid,CM,y}$ = Combined Margin (CM) CO_2 emission factor for grid connected power generation in year, y calculated using the 'Tool to calculate the emission factor for an electricity system', (tCO_{2e}/MWh)

Grid Emission Factor:

The Combined Margin (CM) CO_2 emission factor for grid, or the Grid Emission Factor (GEF) is calculated using the steps indicated in the "Tool to calculate the emission factor for an electricity system" version 2.2.1 (EB 63, Annex 19):

STEP 1: Identify the relevant electricity systems;
STEP 2: Choose whether to include off-grid power plants in the project electricity system (optional);
STEP 3: Select a method to determine the operating margin (OM);
STEP 4: Calculate the operating margin emission factor according to the selected method;
STEP 5: Calculate the build margin (BM) emission factor;

The CPA-DD shall elaborate the above steps.

Step 6: Calculate the combined margin emissions factor

As per the 'Tool to calculate the emission factor for an electricity system' ver 2.2.1 (EB 63, Annex 19), the calculation of the 'Weighted average combined margin (CM)' emission factor ($EF_{grid,CM,y}$) – option (a) for wind energy projects is calculated as follows: "

$$EF_{grid,CM,y} = EF_{grid,OM,y} \times w_{OM} + EF_{grid,BM,y} \times w_{BM}$$

Where:

$EF_{grid,BM,y}$	=	Build margin CO_2 emission factor in year *y* (tCO_2/MWh)
$EF_{grid,OM,y}$	=	Operating margin CO_2 emission factor in year *y* (tCO_2/MWh)
w_{OM}	=	Weighting of operating margin emissions factor (%)
w_{BM}	=	Weighting of build margin emissions factor (%)

The Tool states the following default values for w_{OM} and w_{BM}: (page 18)

Wind and solar power generation project activities: w_{OM} = 0.75 and w_{BM} = 0.25 (owing to their intermittent and non-dispatchable nature) for the first crediting period and for subsequent crediting periods;

The weighted average combined margin is therefore calculated as:

$$EF_{grid,CM,y} = EF_{grid,OM,y} * 0.75 + EF_{grid,BM,y} * 0.25$$

B.6.2. Data and parameters that are to be reported ex-ante

Data / Parameter	$FC_{i,m,y}$
Unit	Ton (solid fuels); m^3 (gaseous fuel)
Description	Amount of fossil fuel type i consumed by power plant / unit m feeding the grid, in year y
Source of data	ONE official data
Value(s) applied	Attach as Annex in CPA-DD
Choice of data Or Measurement methods and procedures	Official released statistics by the national power utility (ONE); reliable data source; latest data available.
Purpose of data	Calculation of OM and BM
Additional comment	OM: the value is fixed once for the crediting period using the most recent three historical years for which data is available at the time of submission of the CPA-DD to the DOE for validation (ex-ante option) BM: the value is fixed ex-ante for the first crediting period.

Data / Parameter	$NCV_{i,y}$
Unit	GJ/mass or volume unit
Description	Net calorific value (energy content) of fossil fuel type *i* in year *y*
Source of data	ONE own source where available. If ONE data is not available then the IPCC default values at the lower limit of the uncertainty at a 95% confidence interval as provided in Table 1.2 of Chapter 1 of Vol. 2 (Energy) of the 2006 IPCC Guidelines on National GHG Inventories shall be considered.
Value(s) applied	Attach as Annex in CPA-DD
Choice of data Or Measurement methods and procedures	According to the Tool to Calculate the Emission Factor for an Electricity System, the national average default value shall be used if values are reliable and documented in regional or national energy statistics / energy balances. Otherwise IPCC default values at the lower limit of the uncertainty at a 95% confidence interval as provided in Table 1.2 of Chapter 1 of Vol. 2 (Energy) of the 2006 IPCC Guidelines for National Greenhouse Gas Inventoriesshall be used.
Purpose of data	Calculation of OM and BM
Additional comment	OM: the value is fixed once for the crediting period using the most recent three historical years for which data is available at the time of submission of the CPA-DD to the DOE for validation (ex-ante option) BM: the value is fixed ex-ante for the first crediting period.

Data / Parameter	$EFCO_{2,i,y}$ and $EFCO_{2,m,i,y}$
Unit	$kgCO_{2e}/TJ$
Description	CO2 emission factor of fossil fuel type i used in power unit m in year y
Source of data	2006 IPCC Guidelines for National Greenhouse Gas Inventories, Reference Manual, Volume 2 (2006),
Value(s) applied	

Fuel	Emission (kgCO2/TJ)
Gas/Diesel Oil	72,600
Residual Fuel Oil	75,500
Petroleum Coke	82,900
Anthracite	94,600
Coking Coal	87,300
Other Bituminous Coal	89,500
Natural Gas	54,300

Choice of data Or Measurement methods and procedures	2006 IPCC Guidelines for National Greenhouse Gas Inventories Volume 2 (2006), chapter 1. Table 1.4. (IPCC, 2006). IPCC default values at the lower limit of the uncertainty at a 95% confidence interval
Purpose of data	For calculation of baseline emissions
Additional comment	

Data / Parameter	$EF_{grid,OMsimple,y}$
Unit	tCO_{2e}/MWh
Description	Simple operating margin CO2 emission factor in year y
Source of data	Calculated using official released statistics by the national power utility (ONE) for the years 2009, 2010 and 2011 (modify as appropriate)
Value(s) applied	(Value to be included in concerned CPA-DD)
Choice of data Or Measurement methods and procedures	Official released statistics by the national power utility (ONE); reliable data source; latest data available.
Purpose of data	For calculation of CM
Additional comment	OM: the value is fixed once for the crediting period using the most recent three historical years for which data is available at the time of submission of the CPA-DD to the DOE for validation (ex-ante option)

Data / Parameter	$EF_{grid,BM,y}$
Unit	tCO_{2e}/MWh
Description	Build margin CO2 emission factor in year y
Source of data	Calculated using official released statistics by the national power utility (ONE) for the year 2011 (modify as appropriate)
Value(s) applied	(Value to be included in concerned CPA-DD)
Choice of data Or Measurement methods and procedures	Official released statistics by the national power utility (ONE); reliable data source; latest data available.
Purpose of data	For calculation of CM
Additional comment	BM: the value is fixed ex ante for the first crediting period.

Data / Parameter	$EF_{grid,CM,y}$
Unit	tCO_{2e}/MWh
Description	Combined margin CO2 emission factor in year y
Source of data	Calculated using values of OM and BM and weighted average as described in Step 6 of B.6.1
Value(s) applied	(Value to be included in concerned CPA-DD)
Choice of data Or Measurement methods and procedures	Calculated
Purpose of data	Calculation of Emission Reduction, ERy
Additional comment	The value is fixed ex ante for the first crediting period.

B.6.3. Ex-ante calculations of emission reductions

>>

According to ACM 0002 version 13.0.0, emission reductions are calculated as follows:

ERy = BEy – PEy

Where,

PEy = 0

$BEy = EG_{PJ.y} * EF_{grid,CM,y}$

$EF_{grid,CM,y}$ has been calculated as (state appropriate value here) tCO2e/MWh.

The value of the annual net potential power supply to the Moroccan grid, $EG_{PJ,y}$ as defined in the feasibility study report (or appropriate reference document) is (state appropriate value here) MWh/year.

Hence,

ERy = (State appropriate value here) * (State appropriate value here)

= (State calculated value here) tCO_{2e}/year.

B.7. Application of the monitoring methodology and description of the monitoring plan
B.7.1. Data and parameters to be monitored by each generic CPA

Data / Parameter	$EG_{PJ,y}$
Unit	MWh
Description	Quantity of net electricity generation that is produced and fed into the grid as a result of the implementation of the CDM project activity in year y, (MWh)
Source of data	State appropriate description here
Value(s) applied	State appropriate value here
Measurement methods and procedures	State appropriate description here
Monitoring frequency	Continuous
QA/QC procedures	State appropriate description here
Purpose of data	For calculation of Emission Reduction, ERy
Additional comment	The data will be archived electronically for two years after the last issuance of CERs for this project activity.

B.7.2. Description of the monitoring plan for a generic CPA
>>
The key parameter required to be monitored is the net electricity, $EG_{PJ,y}$ measured in MWh exported to the Moroccan electricity grid. There is no sampling involved, hence no sampling plan is required. All data monitored and required for verification and issuance be kept and archived electronically for two years after the end of the crediting period or the last issuance of CERs, whichever occurs later. All measurements should be conducted with calibrated measurement equipment according to relevant industry standards.

Monitoring equipment set up:

This section will include the CPA specific information of the following:
- Description of the general project set up.
- Identification of the location of the main metering equipment (e.g. electric substation)
- Description of the monitoring equipment set-up including back up measures.
- A schematic diagram of the above

Measurement and recording systems:

This section will include the CPA specific information of the following:
- Description of the equipment set up for data measurement
- Description of the equipment set up for data recording

Calibration:

This section will include the CPA specific information of the following:
- Description of the precision / accuracy of the monitoring equipment (typically in %)
- Description of the calibration frequency and agency responsible for calibration

Data Management:

This section will include the CPA specific information of the following:

- Description of the data storage, back-up and archiving period.

Operation and Management Structure:

This section will include the CPA specific information of the following:

- Identify the entity / individual responsible for the data recording, storage etc.
- Description of entity/individual's responsibilities.

Data Collection:

This section will include the CPA specific information of the following:

- Description of how the monitored data is made available for ER calculations.

Comparison of Meter Records:

This section will include the CPA specific information of the following:

- Description of the project set up and prioritization of main meter and back-up meter output.

Emission reduction calculation:

The calculations of CO_2 emissions will be based solely on net value production. A detailed report including all the collected data will be sent on a periodic basis to the CME. The calculations of avoided emissions will be carried out on a periodic basis by the person in charge by applying the methodologies and calculations detailed in the CPA-DD.

- - - - -

Appendix 1: Contact information on entity/individual responsible for the PoA

Organization	Office National de l'Electricité (referred to as 'ONE')
Street/P.O. Box	65m Othman Ben Affan Street
Building	
City	Casablanca
State/Region	
Postcode	
Country	Morocco
Telephone	+212 522 668 177
Fax	+212 522 433 242
E-mail	benlamlih@one.ma
Website	www.one.org.ma
Contact person	
Title	Chef de la Division Environment
Salutation	Mr.
Last name	Benlamlih
Middle name	
First name	Omar
Department	
Mobile	
Direct fax	+212 522 433 242
Direct tel.	+212 522 668 177
Personal e-mail	benlamlih@one.ma

Appendix 2: Affirmation regarding public funding

giz Deutsche Gesellschaft für Internationale Zusammenarbeit (GIZ) GmbH

giz Postfach 5180 • 65726 Eschborn

To whom it may concern

RE- funding for PoA development and validation
Affirmation of non-deviation of ODA

To whom of interest,

In the context of the regional technical assistance Project "CDM-JI Initiative" funded by the German Federal Ministry of Environment and Nuclear Safety (BMU) and executed by the Deutsche Gesellschaft für Technische Zusamemnarbeit (GIZ), the latter has signed a convention with ONEE and the Moroccan DNA on the 23rd of December 2011. Among other issues of technical cooperation, the convention stipulates that GIZ will fund the validation costs of the ONEE Wind PoA as a measure to promote mitigation efforts. The funding amounts to 620,000 MAD.

The funding of the validation through funds of the regional CDM-JI Initiative does not constitute a diversion of ODA (Official Development Assistance) but purely dedicated for the validation of the PoA and GIZ will not claim any CERs in return.

No funds of any kind are to be allocated for the first CPA (Tarfaya).

Anselm Duchrow
GIZ
CDM-JI-Initiative
Manager MENA Region

Deutsche Gesellschaft für
Internationale Zusammenarbeit (GIZ) GmbH

Sitz der Gesellschaft Bonn und Eschborn

Friedrich-Ebert-Allee 40
53113 Bonn, Deutschland
T +49 228 44 60-0
F +49 228 44 60-17 66

Dag-Hammarskjöld-Weg 1-5
65760 Eschborn, Deutschland
T +49 61 96 79-0
F +49 61 96 79-11 15

E info@giz.de
I www.giz.de

Amtsgericht Bonn
Eintragungs-Nr. HRB 18384
Amtsgericht Frankfurt am Main
Eintragungs-Nr. HRB 12394
USt-IdNr. DE 113891176
Steuernummer 040 250 56973

Vorsitzender des Aufsichtsrats
Staatssekretär Hans-Jürgen Beerfeltz

Vorstand
Tanja Gönner (Vorstandssprecherin)
Dr. Christoph Beier (Stellv. Vorstandssprecher)
Tom Pätz
Dr. Hans-Joachim Preuß
Cornelia Richter

Commerzbank AG Frankfurt am Main
BLZ 500 400 00
Konto 58 89 555 00
BIC (SWIFT): COBADEFFXXX
IBAN: DE45 5004 0000 0588 9555 00

Appendix 3: Application of methodology(ies)

ACM 0002 version 13.0.0 "Consolidated baseline methodology for grid-connected electricity generation from renewable sources" is applicable under the following conditions:"

Applicability conditions in version 13.0.0 of ACM0002	Characteristics of the project activity	Applicability criterion met?
The project activity is the installation, capacity addition, retrofit or replacement of a power plant/unit of one of the following types: hydro power plant/unit (either with a run-of-river) reservoir or an accumulation reservoir), wind power plant/unit, geothermal power plant/unit solar power plant/unit, wave power plant/unit or tidal power plant/unit;	The CPAs under the PoA will consist of a greenfield installation of a wind power plant/unit that is connected to the electricity grid of Morocco	Applicable
In the case of capacity additions, retrofits or replacements (except for wind, solar, wave or tidal power capacity addition projects which use Option 2: on page 10 to calculate the parameter $EG_{PJ,y}$): the existing plant started commercial operation prior to the start of a minimum historical reference period of five years, used for the calculation of baseline emissions and defined in the baseline emission section, and no capacity expansion or retrofit of the plant has been undertaken between the start of this minimum historical reference period and the implementation of the project activity.	The CPAs under the PoA are all expected to be greenfield installation and does not involve any capacity additions, retrofits or replacements.	Not applicable
In case of hydro power plants:	The project will consist of an installation of a wind power plant/unit only and there is no hydro power generation involved.	Not applicable
The methodology is not applicable to the following: • Project activities that involve switching from fossil fuels to renewable energy sources at the site of the project activity, since in this case the baseline may be the continued use of fossil fuels at the site; • Biomass fired power plants; • A hydro power plant[2] that results in the creation of a new single reservoir or in the increase in an existing single reservoir where the power density of the power plant is less than 4 W/m^2.	The project will consist of an installation of a wind power plant/unit only and does not involve switching from fossil fuel, biomass fired power plant or hydro power generation.	Not applicable

This table shows clearly that version 13.0.0 of ACM0002 is applicable to proposed CPAs to be included under the PoA, hence applicable also to the PoA as a whole.

Appendix 4: Further background information on ex ante calculation of emission reductions

To be determined at CPA level.

Appendix 5: Further background information on the monitoring plan

To be determined at CPA level.

- - - - -

History of the document

Version	Date	Nature of revision(s)
02.0	EB 66 13 March 2012	Revision required to ensure consistency with the "Guidelines for completing the programme design document form for CDM programmes of activities" (EB 66, Annex 12).
01	EB33, Annex 41 27 July 2007	Initial adoption.
Decision Class: Regulatory **Document Type:** Form **Business Function:** Registration		